SERVICE MANUAL

RA-2 CHASSIS

MODEL	COMMANDER	DEST.	CHASSIS NO.
KP-46C36	RM-Y136A	US	SCC-K90C-A
KP-48S35	RM-Y136A	US	SCC-K90B-A
		Canadian	SCC-N22A-A
KP-53S35	RM-Y136A	US	SCC-K90A-A
		Canadian	SCC-N22B-A
KP-61S35	RM-Y136A	US	SCC-K90D-A

MODEL	COMMANDER	DEST.	CHASSIS NO.

RM-Y136A

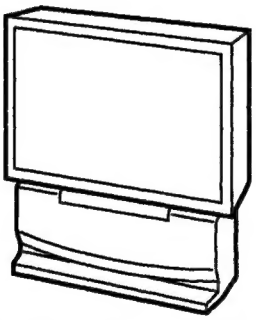

KP-46C36/48S35/53S35

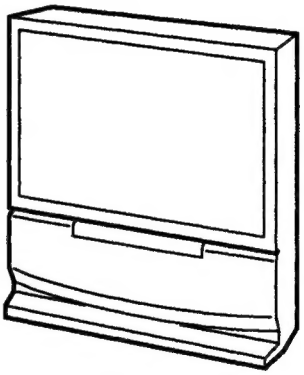

KP-61S35

996514401

MICROFILM

COLOR REAR VIDEO PROJECTOR

SONY®

※ Please file according to model size. ..... ■

46 48 53 61

SPECIFICATIONS

Projection system 3 picture tubes, 3 lenses, horizontal in-line system

Picture tube 7 inch high-brightness monochrome tubes (6.3 raster size), with optical coupling and liquid cooling system

Projection lenses High performance, large-diameter hybrid lens F1.1

Screen size (measured diagonally)

KP-46C36	46 inches
KP-48S35	48 inches
KP-53S35	53 inches
KP-61S35	61 inches

Television system American TV standards

Channel coverage VHF: 2 – 13 / UHF: 14 – 69 / CATV: 1 – 125

Antenna 75 ohm external antenna terminal for VHF/UHF

Inputs/output

VIDEO IN 1
S VIDEO (4-pin mini DIN):
Y: 1 Vp-p, 75-ohms unbalanced, sync negative
C: 0.286 Vp-p (Burst signal) 75 ohms
VIDEO (phono jack): 1 Vp-p, 75-ohms unbalanced, sync negative
AUDIO (phono jacks): 500 mVrms (100% modulation)
Impedance : 47 kilohms
VIDEO IN 2 (*for KP-48S35/53S35/61S35*)
VIDEO IN 3 (*for KP-46C36 only*)
VIDEO (phono jacks): 1 Vp-p, 75-ohms unbalanced, sync negative
AUDIO (phono jacks): 500 mVrms (100% modulation)
Impedance: 47 kilohms

MONITOR OUT
VIDEO (phono jack): 1 Vp-p, 75-ohms unbalanced, sync negative
AUDIO (phono jacks): 500 mVrms (100% modulation), Impedance: 10 kilohms
AUDIO OUT (phono jacks): 500 mVrms mVrms (100% modulation)
Impedance: 5 kilohms

Speaker Full range speaker 100 mm (3.9 inches) diameter

Speaker output 10 W × 2

Power requirement 120 V, 60 Hz

Power consumption 165 W
Standby mode: 3 W

	Dimensions(W/H/D)	Mass
KP-46C36	1,066 × 1,306 × 563 mm (42 × 51 1/2 × 22 1/4 inches)	65 kg (143 lbs 5 oz)
KP-48S35	1,106 × 1,337 × 571 mm (43 5/8 × 52 5/8 × 22 1/2 inches)	67 kg (147 lbs 11 oz)
KP-53S35	1,218 × 1,413 × 614 mm (48 × 55 5/8 × 24 1/4 inches)	69 kg (152 lbs 1 oz)
KP-61S35	1,338 × 1,506 × 642 mm (52 3/4 × 59 3/8 × 25 3/8 inches)	122 kg (268 lbs 15 oz)

Supplied accessories
Remote control RM-Y136A (1)
Size AA (R6) battery (2)

Optional accessories
U/V mixer EAC-66
Connecting cables RK-74A, VMC-810S/820S, YC-15V/30V, VMC-720M
High-contrast protective screen
SCN-46X1 (*For KP-46C36*)
SCN-48X2 (*For KP-48S35*)
SCN-53X2 (*For KP-53S35*)
SCN-61X2 (*For KP-61S35*)

Design and specifications are subject to change without notice.

(CAUTION)
SHORT CIRCUIT THE ANODE OF THE PICTURE TUBE AND THE ANODE CAP TO THE METAL CHASSIS, CRT SHIELD, OR CARBON PAINTED ON THE CRT, AFTER REMOVING THE ANODE.

WARNING!!
AN ISOLATION TRANSFORMER SHOULD BE USED DURING ANY SERVICE TO AVOID POSSIBLE SHOCK HAZARD, BECAUSE OF LIVE CHASSIS.
THE CHASSIS OF THIS RECEIVER IS DIRECTLY CONNECTED TO THE AC POWER LINE.

SAFETY-RELATED COMPONENT WARNING!!
COMPONENTS IDENTIFIED BY SHADING AND MARK ⚠ ON THE SCHEMATIC DIAGRAMS, EXPLODED VIEWS AND IN THE PARTS LIST ARE CRITICAL FOR SAFE OPERATION. REPLACE THESE COMPONENTS WITH SONY PARTS WHOSE PART NUMBERS APPEAR AS SHOWN IN THIS MANUAL OR IN SUPPLEMENTS PUBLISHED BY SONY. CIRCUIT ADJUSTMENTS THAT ARE CRITICAL FOR SAFE OPERATION ARE IDENTIFIED IN THIS MANUAL. FOLLOW THESE PROCEDURES WHENEVER CRITICAL COMPONENTS ARE REPLACED OR IMPROPER OPERATION IS SUSPECTED.

(ATTENTION)
APRES AVOIR DECONNECTE LE CAP DE L'ANODE, COURT-CIRCUITER L'ANODE DU TUBE CATHODIQUE ET CELUI DE L'ANODE DU CAP AU CHASSIS METALLIQUE DE L'APPAREIL, OU AU COUCHE DE CARBONE PEINTE SUR LE TUBE CATHODIQUE OU AU BLINDAGE DU TUBE CATHODIQUE.

ATTENTION!!
AFIN D'EVITER TOUT RESQUE D'ELECTROCUTION PROVENANT D'UN CHÁSSIS SOUS TENSION, UN TRANSFORMATEUR D'ISOLEMENT DOIT ETRE UTILISÉ LORS DE TOUT DÉPANNAGE. LE CHÁSSIS DE CE RÉCEPTEUR EST DIRECTEMENT RACCORDÉ À L'ALIMENTATION SECTEUR.

ATTENTION AUX COMPOSANTS RELATIFS À LA SÉCURITÉ!!
LES COMPOSANTS IDENTIFIÈS PAR UNE TRAME ET PAR UNE MARQUE ⚠ SUR LES SCHÉMAS DE PRINCIPE, LES VUES EXPLOSÉES ET LES LISTES DE PIECES SONT D'UNE IMPORTANCE CRITIQUE POUR LA SÉCURITÉ DU FONCTIONNEMENT. NE LES REMPLACER QUE PAR DES COMPOSANTS SONY DONT LE NUMÉRO DE PIÉCE EST INDIQUÉ DANS LE PRÉSENT MANUEL OU DANS DES SUPPLÉMENTS PUBLIÉS PAR SONY. LES RÉGLAGES DE CIRCUIT DONT L'IMPORTANCE EST CRITIQUE POUR LA SÉCURITÉ DU FONCTIONNEMENT SONT IDENTIFIES DANS LE PRÉSENT MANUEL. SUIVRE CES PROCÉDURES LORS DE CHAQUE REMPLACEMENT DE COMPOSANTS CRITIQUES, OU LORSQU'UN MAUVAIS FONCTIONNEMENT EST SUSPECTÉ.

SAFETY CHECK-OUT
(US Model only)

After correcting the original service problem, perform the following safety checks before releasing the set to the customer:

1. Check the area of your repair for unsoldered or poorly-soldered connections. Check the entire board surface for solder splashes and bridges.

2. Check the interboard wiring to ensure that no wires are "pinched" or contact high-wattage resistors.

3. Check that all control knobs, shields, covers, ground straps, and mounting hardware have been replaced. Be absolutely certain that you have replaced all the insulators.

4. Look for unauthorized replacement parts, particularly transistors, that were installed during a previous repair. Point them out to the customer and recommend their replacement.

5. Look for parts which, though functioning, show obvious signs of deterioration. Point them out to the customer and recommend their replacement.

6. Check the line cords for cracks and abrasion. Recommend the replacement of any such line cord to the customer.

7. Check the B+ and HV to see if they are at the values specified. Make sure your instruments are accurate; be suspicious of your HV meter if sets always have low HV.

8. Check the metal trim, metallized knobs, screws, and all other exposed metal parts for AC leakage.
   Check leakage as described below.

LEAKAGE TEST

The AC leakage from any exposed metal part to earth ground and from all exposed metal parts to any exposed metal part having a return to chassis, must not exceed 0.5mA (500 microampers). Leakage current can be measured by any one of three methods.

1. A commercial leakage tester, such as the Simpson 229 or RCA WT-540A. Follow the manufactures' instructions to use these instruments.

2. A battery-operated AC milliammeter. The Data Precision 245 digital multimeter is suitable for this job.

3. Measuring the voltage drop across a resistor by means of a VOM or battery-operated AC voltmeter. The "limit" indication is 0.75V, so analog meters must have an accurate low-voltage scale. The Simpson 250 and Sanwa SH-63Trd are examples of a passive VOM that is suitable. Nearly all battery operated digital multimeters that have a 2V AC range are suitable. (See Fig. A)

HOW TO FIND A GOOD EARTH GROUND

A cold-water pipe is guaranteed earth ground; the cover-plate retaining screw on most AC outlet boxes is also at earth ground. If the retaining screw is to be used as your earth-ground, verify that it is at ground by measuring the resistance between it and a cold-water pipe with an ohmmeter. The reading should be zero ohms. If a cold-water pipe is not accessible, connect a 60-100 watts trouble light (not a neon lamp) between the hot side of the receptacle and the retaining screw. Try both slots, if necessary, to locate the hot side of the line, the lamp should light at normal brilliance if the screw is at ground potential. (See Fig. B)

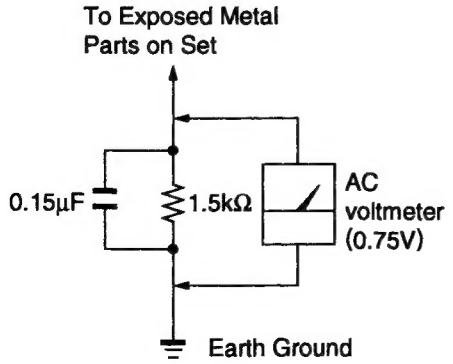

Fig. A. Using an AC voltmeter to check AC leakage.

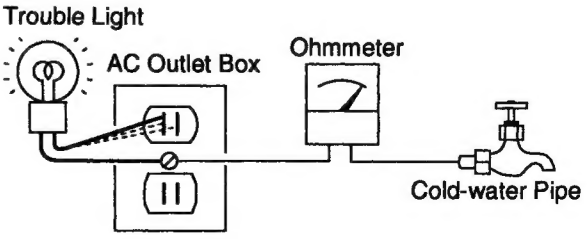

Fig. B. Checking for earth ground.

TABLE OF CONTENTS

SECTION 1
GENERAL

The operating instructions mentioned here are partial abstracts from the Operating Instruction Manual. The page numbers of the Operating Instruction Manual remain as in the manual.

Step 2: Hookup

Although you can use either an indoor or outdoor antenna with your projection TV, we recommend that you connect an outdoor antenna or a cable TV system to get better picture quality.

Connecting an antenna

Connect your antenna cable to the VHF/UHF antenna terminal. If you cannot connect your antenna cable directly to the terminal, follow one of the instructions below depending on your cable type.

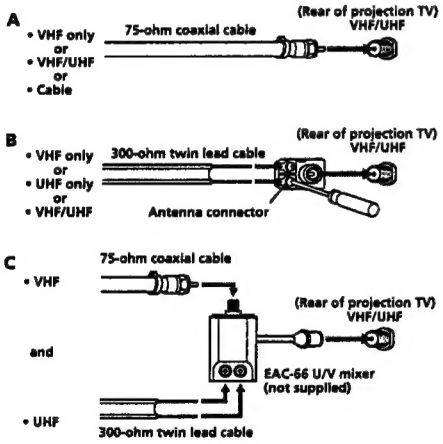

Notes
- Most VHF/UHF combination antennas have a signal splitter. Remove the splitter before attaching the appropriate connector.
- If you use the U/V mixer, snow and noise may appear in the picture when viewing cable TV channels over 37.

Connecting an antenna/cable TV system without a VCR

To cable or antenna

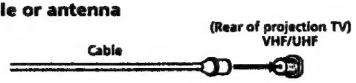

To cable box

If your cable company requires you to connect a cable box, make the connection as follows:

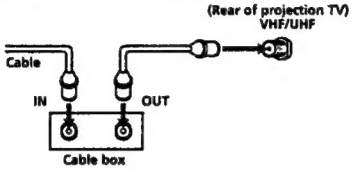

To cable box and cable

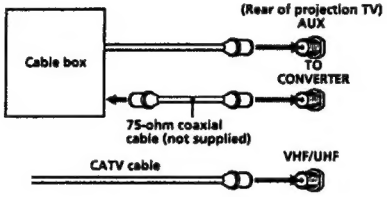

Pay cable TV systems use scrambled or encoded signals requiring a cable box* in addition to the normal cable connection.

* The cable box will be supplied by the cable company.

Note
- You cannot watch the signal through an AUX connector as a window picture.

To cable and antenna

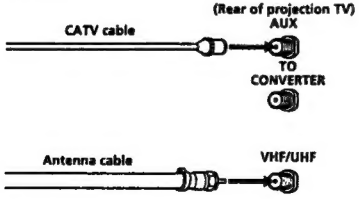

Note
- Do not connect anything to the TO CONVERTER connector in this case.

Connecting an antenna/cable TV system with a VCR

For details on connection, see your VCR instruction manual.
Before making the connection, disconnect the AC power cords of the equipment to be connected.

After making these connections, you will be able to do the following:
- View the playback of video tapes
- Record one TV program while viewing another program
- Watch two TV programs at once using PIP

To a conventional VCR

Notes
- For models KP-46C36, you can connect the audio and video outputs of the VCR to VIDEO 3 IN jacks instead of the VIDEO 2 IN jacks.
- To connect a monaural VCR, connect the audio output of the VCR to AUDIO-L (MONO) of VIDEO 1/2/3 IN on the projection TV.

Without a cable box

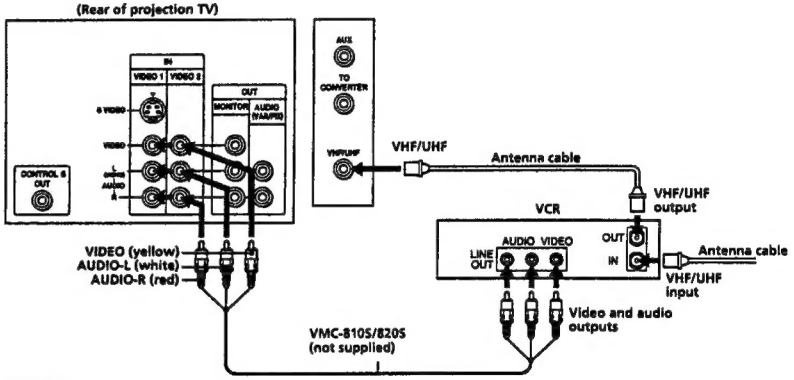

With a cable box

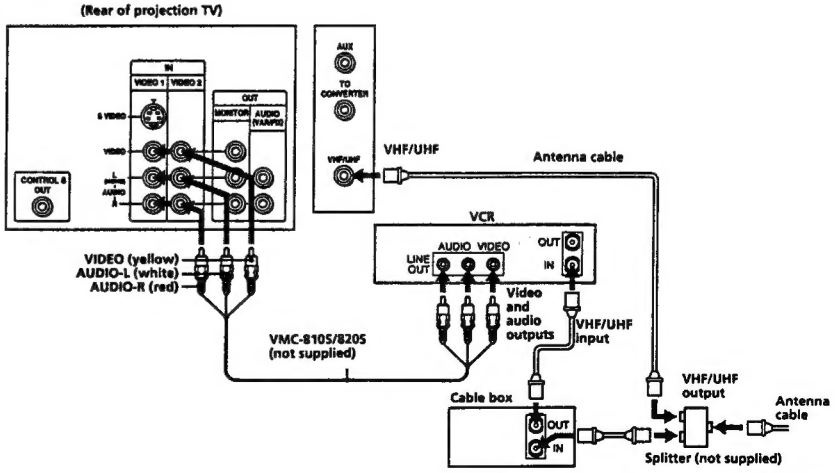

To an S video equipped VCR

If your VCR has an S VIDEO output connector, make the following connections.
Whenever you connect the cable to the S VIDEO input connector, the projection TV automatically receives S video signals.

Without a cable box

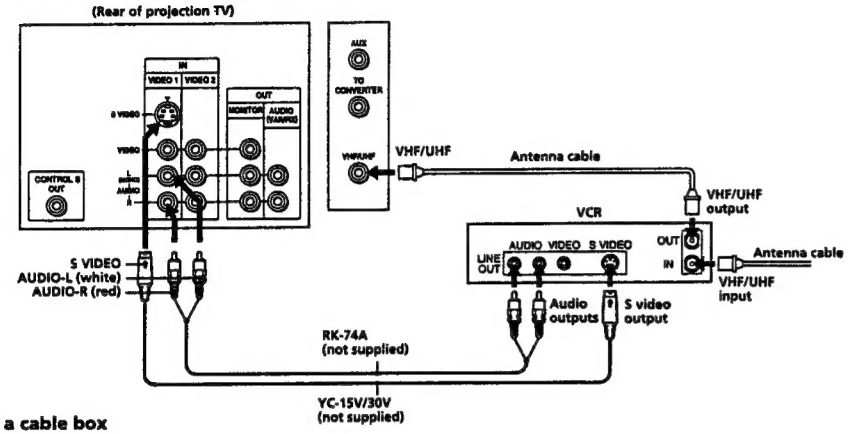

With a cable box

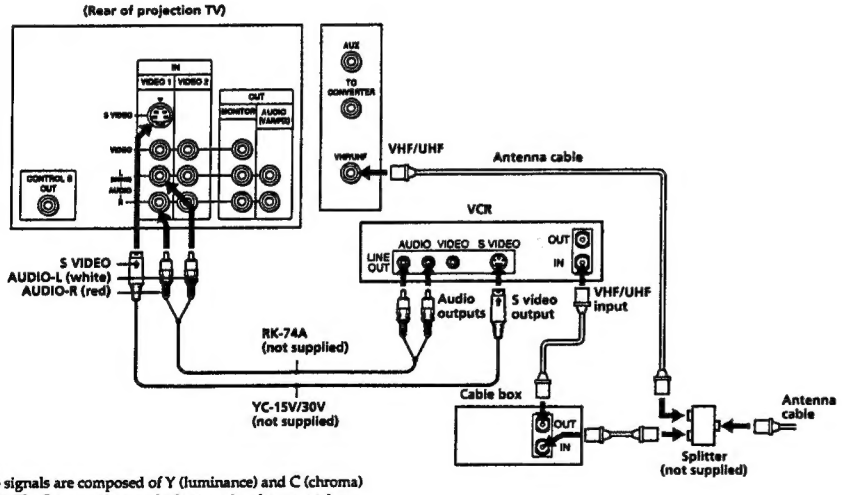

Note
- Video signals are composed of Y (luminance) and C (chroma) signals. The S connection sends the two signals separately preventing degradation, and gives better picture quality compared to conventional connections.

Connecting a DBS receiver

For details on connection, see the instruction manual of the DBS (Digital Broadcasting Satellites) receiver.

Note
- For models KP-46C36, you can connect the audio and video outputs of the VCR to VIDEO 3 IN jacks instead of the VIDEO 2 IN jacks.

To a projection TV

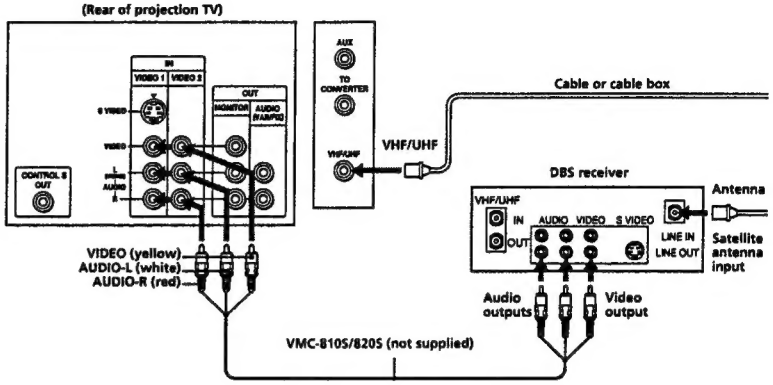

Note
- You can use the S VIDEO connector or the composite video connector for the video connection.

To a projection TV and VCR

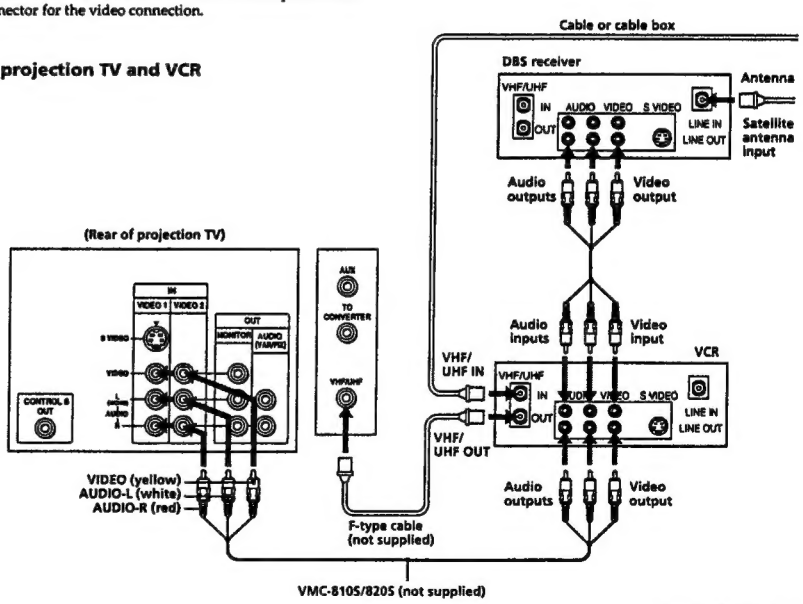

Connecting a camcorder

■ *KP-46C36 only*

Use this connection to view a camcorder picture.

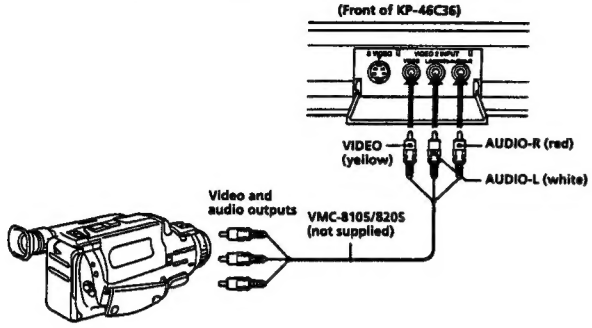

Note

- To connect a monaural camcorder, connect the audio output of the camcorder to AUDIO-L (MONO) of VIDEO 2 INPUT on the projection TV.

Connecting an audio system

When connecting audio equipment, see page 28 for more information.

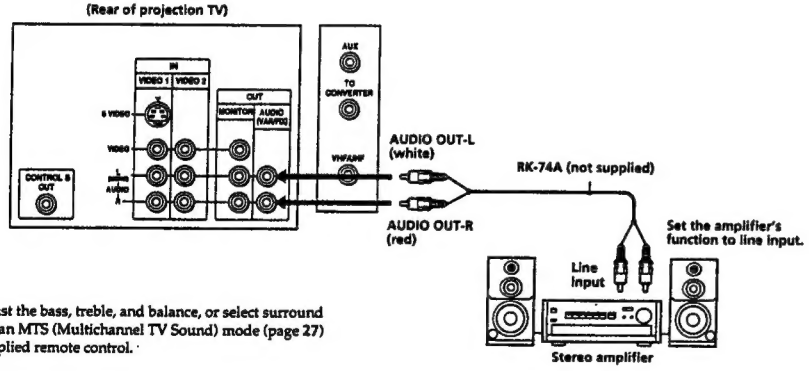

Note

- You can adjust the bass, treble, and balance, or select surround (page 26) or an MTS (Multichannel TV Sound) mode (page 27) with the supplied remote control.

Connecting two VCRs for tape editing using MONITOR OUT

You can record input images displayed on the screen. This type of connection should be used only when you connect from the line input of one VCR, and from the line output of a second VCR.

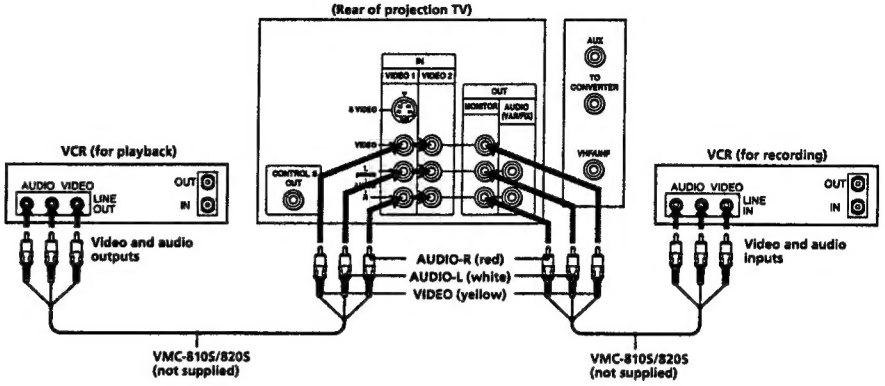

Notes

- Do not change the input signal while editing through MONITOR OUT, or the output signal will also change.
- You can use the S video jack to connect a VCR for playback and the composite video connector to connect a VCR for recording.
- For models KP-46C36, you can connect the audio and video outputs of the VCR to VIDEO 3 IN jacks instead of the VIDEO 2 IN jacks.
- When connecting a single VCR to the projection TV, do not connect the MONITOR OUT to the VCR's line input, while at the same time connecting from the projection TV's VIDEO IN connectors to the VCR's line output, as shown below.

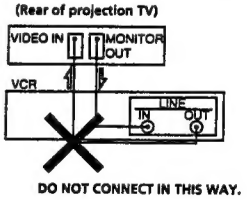

Connecting a Sony SAVA series speaker system

If you have a Sony SAVA series speaker system, connect your speakers to the AUDIO (VAR/FIX) OUT jacks on the rear of the projection TV with the audio cable supplied with the speakers. You can take advantage of the speakers' Dolby Pro Logic* surround system and super woofer mode, and control them with the supplied remote control. When connecting a Sony SAVA series speaker system, see page 27 for more information.

* Manufactured under license from Dolby Laboratories Licensing Corporation. Additionally licensed under Canadian patent number 1,037,877. "Dolby," the double-D symbol DD and "Pro Logic" are trademarks of Dolby Laboratories Licensing Corporation.

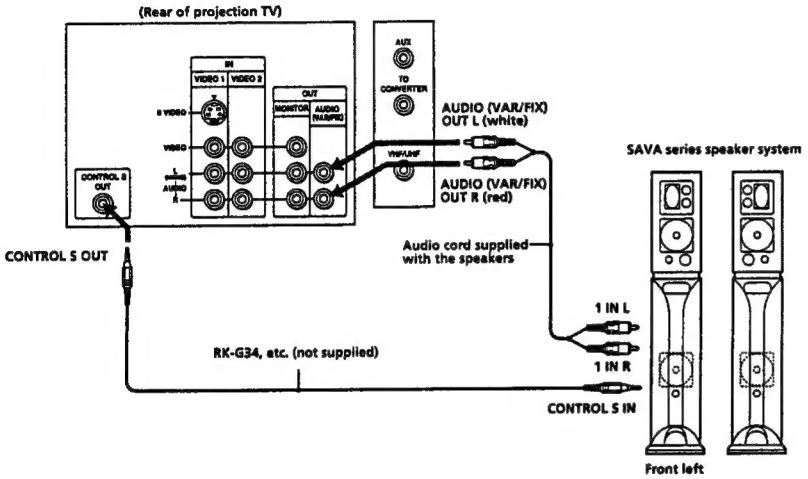

Step 3: Setting up the remote control

Inserting batteries

Insert two size AA (R6) batteries (supplied) by matching the + and – on the battery to the diagram inside the battery compartment.

Notes

- Under normal conditions, batteries will last up to six months. If the remote control does not operate properly or the indicators of the buttons on the remote control do not light up, the batteries may be worn out. When replacing batteries, replace both of them with new ones.
- Do not mix old batteries with new ones or mix different types of batteries together.
- If the electrolyte inside the battery should leak, wipe the contaminated area of the battery compartment with a cloth and replace the old batteries with new ones. To prevent the electrolyte from leaking, remove the batteries when you don't plan to use the remote control for a long period of time.
- Do not handle the remote control roughly. Do not drop it, step on it, or let it get wet.
- Do not place the remote control in direct sunlight, near a heater, or where the humidity is high.

Getting to know buttons on the remote control

Names of buttons on the remote control are indicated in different colors to represent the available functions.

Button color

Transparent (light up) ..... TV/VCR/DBS/Cable box function buttons. Press the appropriate function button first to change the remote control's function.
Green ..... Buttons relevant to power operations.

Label color

White ..... TV/VCR/DBS/Cable box operation buttons.
Yellow ..... PIP operation buttons.
Blue ..... DBS operation buttons.

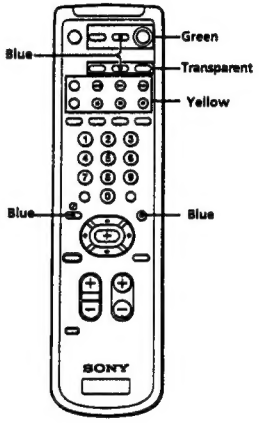

Step 4: Setting up the projection TV automatically

(AUTO SET UP)

You can set up your projection TV easily by using the AUTO SET UP feature. It presets all the receivable channels, adjusts the convergence and changes the on-screen menu language. To set up the projection TV manually, see "Adjusting convergence" (page 16), "Setting cable TV on or off" (page 17), "Presetting channels" (page 18) and "Changing the menu language" (page 18).
If the projection TV is set to a video input, you cannot perform AUTO SET UP. Press TV/VIDEO so that a channel number appears.

(Front of projection TV)

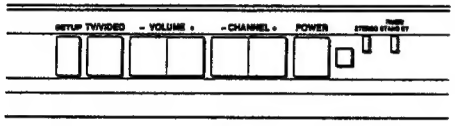

Before you start using AUTO SET UP, be sure to connect the antenna or cable to the projection TV (see page 6).

1 Press POWER to turn the projection TV on.

2 Press SETUP on the front of the projection TV.
AUTO SET UP screen appears.

3 Press CHANNEL +/– or VOLUME + to select the on-screen menu language.
If you prefer Spanish or French to English, you can change the on-screen menu language.

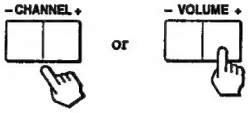

All of the menus will be set to the factory preset condition in the selected language.

4 Press VOLUME – to start AUTO SET UP.

5 Press CHANNEL + to preset channels.

"AUTO PROGRAM" appears on the screen and the TV starts scanning and presetting channels automatically. When all the receivable channels are stored, "AUTO PROGRAM" disappears and the following menu appears. If the projection TV receives cable TV channels, CABLE is set to ON automatically.

To exit AUTO PROGRAM
Press any button.

6 Adjust convergence.
(1) Press CHANNEL +.
The CONVERGENCE adjustment screen appears.

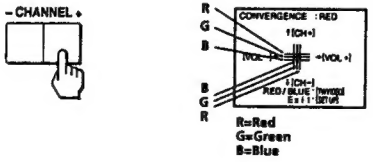

(2) Press TV/VIDEO to select RED or BLUE.

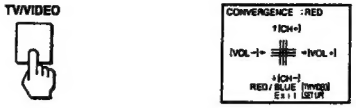

(3) Using CHANNEL +/– or VOLUME +/–, move the line until it converges with the center green line.

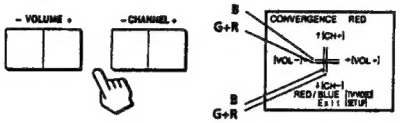

To move horizontal line up/down, press CHANNEL +/–.
To move vertical line right/left, press VOLUME +/–.

(4) Repeat steps (2) and (3) to adjust the other lines until all three lines converge and are seen as a white cross.

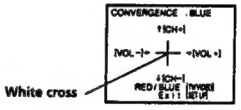

Note
- Using the AUX connector, press TV (black button) first and make sure that "AUX" is displayed beside the channel number on the screen. Then follow the steps 2 to 6 above to perform AUTO SET UP.

To preview the main functions (DEMO)
Press TV/VIDEO on the projection TV in step 4. The functions and menus are displayed one by one.

To exit DEMO
Press any button.

Erasing or adding channels

After AUTO SET UP, you can erase unnecessary channels or add the channels you want. Preset channels during the day rather than late at night, when some channels may not be broadcasting.

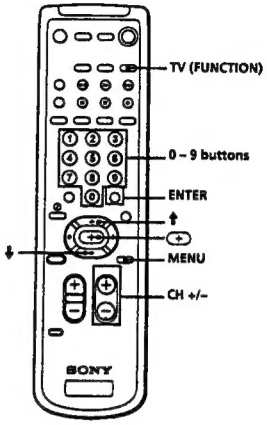

1 Press TV (FUNCTION).

2 Press MENU.
The main menu appears.

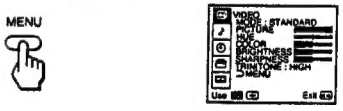

3 Press ↑ or ↓ to select 🖶, and press ⊕.
The SET UP menu appears.

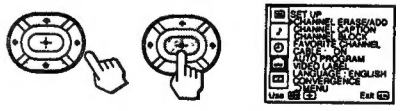

4 Press ↑ or ↓ to select CHANNEL ERASE/ADD, and press ⊕.
The CHANNEL ERASE/ADD menu appears.

5 Erase and/or add channels:

To erase an unwanted channel

(1) Make sure the cursor (▶) is beside ERASE.
(2) Press CH +/– or the 0 – 9 buttons to select the channel you want to erase, and press ENTER.

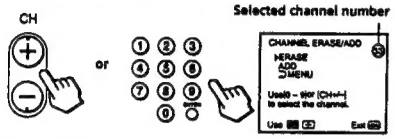

(3) Press ⊕.
The "–" indication appears beside the channel number, showing that the channel is erased from the preset memory.

To add a channel that you want

(1) Press ↑ or ↓ to move the cursor (▶) to ADD.
(2) Press the 0 – 9 buttons to select the channel you want to add, and press ENTER.

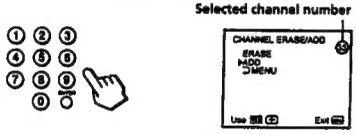

(3) Press ⊕.
The "+" indication appears beside the channel number, showing that the channel is added to the preset memory.

6 To erase and/or add other channels, repeat step 5.

7 Press MENU to return to the original screen.

Notes

- If you erase or add a VHF or UHF channel, the cable TV channel with the same number is also erased or added, and vice versa.
- Erasing and adding channels is also available for the AUX input.

Adjusting convergence (CONVERGENCE)

The projection tube image appears on the screen in three layers (red, green and blue). If they do not converge, the color is poor and the picture blurs. To correct this, adjust convergence.
You do not have to do this procedure if you perform AUTO SET UP (page 14). Do this procedure only when you want to adjust it manually.

1 Press MENU.

2 Press ↑ or ↓ to select 🖶, and press ⊕.

3 Press ↑ or ↓ to select CONVERGENCE, and press ⊕.
The CONVERGENCE adjustment screen appears.

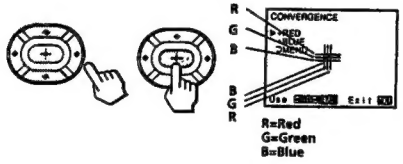

4 Press ↑, ←, ↓, or → to move the cursor (▶) to the symbol showing the line you want to adjust, and press ⊕.

+RED : Red vertical and horizontal line (left/right/up/down adjustment)
+BLUE : Blue vertical and horizontal line (left/right/up/down adjustment)

5 Press ↑, ←, ↓, or → to move the line until it converges with the center green line, and press ⊕.

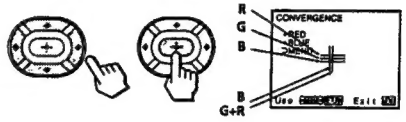

To move	Press
Up	↑
Down	↓
Right	→
Left	←

6 Repeat steps 4 and 5 to adjust the other lines until all three lines converge and are seen as a white cross.

7 Press MENU to return to the original screen.

Setting cable TV on or off

If you have connected the projection TV to a cable TV system, set CABLE to ON (the factory setting). If not, set CABLE to OFF.
You do not have to do this procedure if you perform AUTO SET UP (page 14). Do this procedure only when you want to set it manually.

1 Press MENU.

2 Press ↑ or ↓ to select 🖶, and press ⊕.

3 Set CABLE to ON or OFF:
(1) Press ↑ or ↓ to move the cursor (▶) to CABLE, and press ⊕.
(2) Press ↑ or ↓ to select ON or OFF, and press ⊕.

4 Press MENU to return to the original screen.

Note

- If CABLE appears in gray, the projection TV is set to a video input and you cannot select CABLE. Press TV (black button) so that a channel number appears.

Presetting channels

You can preset TV channels easily by using the AUTO PROGRAM feature.
You do not have to do this procedure if you perform AUTO SET UP (page 14). Do this procedure only when you want to set it manually.

1 Press MENU.

2 Press ↑ or ↓ to select 🖶, and press ⊕.

3 Press ↑ or ↓ to select AUTO PROGRAM, and press ⊕.

"AUTO PROGRAM" appears on the screen and the projection TV starts scanning and presetting channels automatically. When all the receivable channels are stored, "AUTO PROGRAM" disappears and the lowest numbered channel is displayed.

4 Press MENU to return to the original screen.

To exit AUTO PROGRAM
Press any button.

Notes
- If the AUTO PROGRAM menu appears in gray, the projection TV is set to a video input and you cannot select AUTO PROGRAM. Press TV (black) button so that a channel number appears.
- Presetting channels is also available for the AUX input.

Changing the menu language

If you prefer Spanish or French to English, you can change the menu language.
You do not have to do this procedure if you select the language during AUTO SET UP (page 14). Do this procedure only when you want to set it manually.

1 Press MENU.

2 Press ↑ or ↓ to select 🖶, and press ⊕.

3 Press ↑ or ↓ to select LANGUAGE, and press ⊕.

4 Press ↑ or ↓ to select your favorite language, "ENGLISH", "ESPAÑOL," or "FRANÇAIS" and press ⊕.

5 Press MENU to return to the original screen.

Note
- Certain parts of the Spanish or French menus remain in English.

Watching the TV

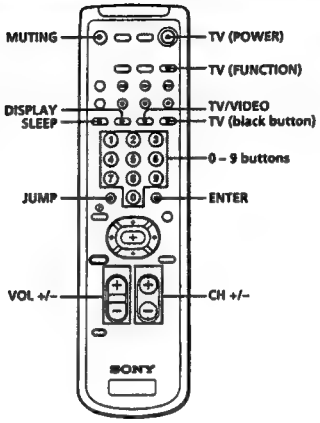

1 Press TV (POWER) to turn on the projection TV.
The TIMER/STANDBY indicator flashes until the picture appears.

If "VIDEO" appears on the screen, press TV (black button) so that a channel number appears.

2 Press TV (FUNCTION).

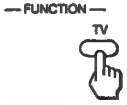

Once you press TV (FUNCTION), the projection TV function is set unless another function button is pressed.

3 Select the channel you want:

To select a channel directly
Press the 0 – 9 buttons, and press ENTER.
For example, to select channel 10, press 1, 0 and ENTER.

To scan through channels
Press CH +/– until the channel you want appears.

The channel can also be selected without pressing ENTER.

4 Press VOL +/– to adjust the volume.

Switching quickly between two channels

You can use the JUMP button to switch or "jump" back and forth between two channels.

Press JUMP.

Pressing JUMP again switches the channel back to the one you selected last.

Note
- You cannot jump to channels you scanned through using the CH +/– buttons.

Muting the sound

Press MUTING.
"MUTING" appears on the screen.

To restore the sound, press MUTING again, or press VOL +.

Displaying on-screen information

Press DISPLAY repeatedly until the desired display appears.
Each time you press DISPLAY, the display changes as follows:

Status display* → XDS ON** → CC 1 ON*** → DISPLAY OFF

* Channel number, the current time, channel caption (if set), and MTS mode (if SAP is selected) are displayed. SAP indication disappears after three seconds.
** Some programs are broadcast with XDS (Extended Data Service) which shows a network name, program name, program type, program length, call letters, and time of the show. When you select XDS with the DISPLAY button, this information will be displayed on the screen if the broadcaster offers this service.
*** Some programs are broadcast with Caption Vision. When you select Caption Vision with the DISPLAY button, Caption Vision will be displayed on the screen if the broadcaster offers this service. (See page **34** for selecting Caption Vision.)

To cancel the display, press DISPLAY repeatedly until "DISPLAY OFF" appears. "DISPLAY OFF" goes off after three seconds.

Setting the Sleep Timer

The projection TV stays on for the length of time you specify and then shuts off automatically.

Press SLEEP repeatedly until the time (minutes) you want appears.
Each time you press SLEEP, the time changes as follows:
30 → 60 → 90 → SLEEP OFF

To cancel the Sleep Timer, press SLEEP repeatedly until "SLEEP OFF" appears, or turn off the projection TV.

Watching a video input picture

Press TV/VIDEO repeatedly until the desired video input appears.
Each time you press TV/VIDEO, the display changes as follows:

■ ***KP-41T35/46C36 only***

TV → VIDEO 1 → VIDEO 2 → VIDEO 3

■ ***KP-48S35/53S35/61S35 only***

TV → VIDEO 1 → VIDEO 2

To return to the TV picture, press TV (black button) so that a channel number appears.

Changing the VHF/UHF input to the AUX input

Press TV (black button).
"AUX" appears beside the channel number.

Pressing TV (black button) again switches back to the VHF/UHF input.

Watching two programs at one time — PIP

The Picture-in-Picture (PIP) feature allows you to watch both the main picture and a window picture simultaneously.

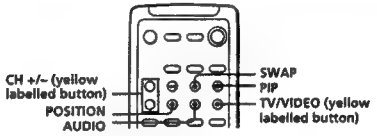

Use the yellow labelled buttons for PIP operations.

Displaying a window picture

Press PIP.

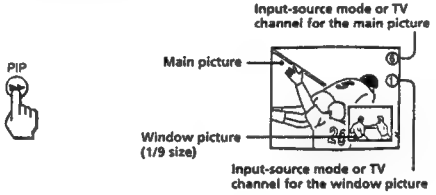

Press PIP again to display a smaller window picture.

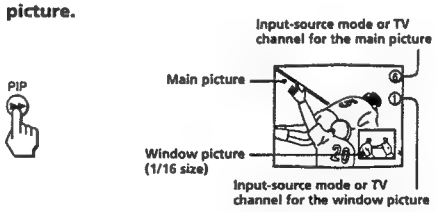

To remove the window picture, press PIP again.

Note
- The window picture may be affected by the condition of the main picture.

Changing the window picture input mode

Press TV/VIDEO (yellow labelled button) to select the input mode.
Each time you press TV/VIDEO (yellow labelled button), "TV," "VIDEO 1," "VIDEO 2," and "VIDEO 3 (*for KP-46C36 only*)" appear in sequence.

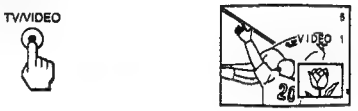

A window picture will appear in the same input mode as the last time you used PIP.

Note
- If you connect your VCR without a cable box, your PIP input source is a VCR. If you connect your VCR with a cable box, your PIP input source is a VCR or cable box.

Listening to the sound of the window picture

Press AUDIO.
The ♪ display appears next to the PIP channel number for a few seconds, indicating that the window picture sound is being received.

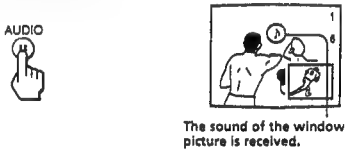

To restore the main picture sound, press AUDIO again. The ♪ display moves to the main picture channel number.

Changing TV channels in the window picture

Press CH +/– (yellow labelled button).

Changing the position of the window picture

Press POSITION.
Each time you press POSITION, the window picture will move counterclockwise on the screen.

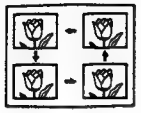

Swapping the main and window pictures

Press SWAP.
Each time you press SWAP, the images and sound from the main and window pictures switch places with another.

Note
- The channels being received through the AUX connector cannot be displayed as a window picture.

Freezing the picture (FREEZE)

The FREEZE feature is useful when you want to write down an information such as a recipe from a cooking program, a displayed address, or a phone number.
The frozen picture changes as follows depending on whether the PIP function is used or not.

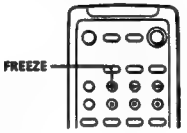

Press FREEZE.

When the PIP function is not being used

Press FREEZE.

The frozen picture appears in the window picture.

To remove the frozen window picture, press FREEZE again.

When the PIP function is being used

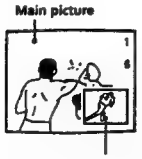

Press FREEZE.

The images in the window picture freeze.

To cancel the frozen window picture, press FREEZE again.

Adjusting the picture (VIDEO)

When watching TV programs, you can adjust the picture to suit your taste.
You can adjust the picture of video input(s) as well.

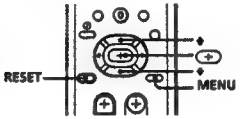

1 Press MENU.

2 Press ↑ or ↓ to select (III), and press ⊕.

3 Select the item you want to adjust.
For example:
(1) To adjust the brightness, press ↑ or ↓ to move the cursor (▶) to BRIGHTNESS.

(2) Press ⊕.

4 Adjust the selected item:
(1) Press ↑, ←, ↓, or → to adjust the item.

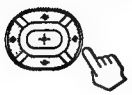

(2) Press ⊕.
The new setting appears in the VIDEO menu.

For details on each item, see "Description of adjustable items" below.

5 To adjust other items, repeat steps 3 and 4.

6 Press MENU to return to the original screen.

Description of adjustable items

Item	Press ← or → to	Press ↑ or ↓ to
PICTURE	Decrease picture contrast and give soft color.	Increase picture contrast and give vivid color.
HUE	Make picture tones become purplish.	Make picture tones become greenish.
COLOR	Decrease color intensity.	Increase color intensity.
BRIGHTNESS	Darken the picture.	Brighten the picture.
SHARPNESS	Soften the picture.	Sharpen the picture.

To restore the factory settings

Press RESET after displaying and selecting the VIDEO menu.
All of the settings are restored to the factory settings.

Adjusting the color temperature (TRINITONE)

The TRINITONE feature controls the color temperature, permitting white balance preference adjustment without affecting skin tones.

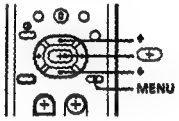

1 Press MENU.

2 Press ↑ or ↓ to select ▥ and press ⊕.

3 Press ↑ or ↓ to select TRINITONE and press ⊕.

4 Press ↑ or ↓ to select NTSC STD, MEDIUM, or HIGH and press ⊕.

Choose	To
HIGH	a cool (bluish) white.
MEDIUM	a neutral white.
NTSC STD	a warm (reddish) white.

Selecting the video mode (VIDEO)

The video mode feature allows you to choose three different modes of picture settings. Choose the one that best suits the type of program that you want to watch.

1 Press MENU.

2 Press ↑ or ↓ to select ▥, and press ⊕.

3 Press ↑ or ↓ to select MODE, and press ⊕.

4 Press ↑ or ↓ to select STANDARD, MOVIE, or SPORTS mode, and press ⊕.

Choose	To
STANDARD	Receive a standard picture.
MOVIE	Receive a finely detailed picture.
SPORTS	Receive a vivid, bright picture.

5 Press MENU to return to the original screen.

Note

- The settings for these modes can be adjusted in the VIDEO menu.

Adjusting the sound (AUDIO)

You can adjust the quality of the TV sound to suit your taste. You can adjust the sound of the video input(s) as well.

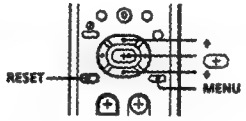

1 Press MENU.

2 Press ↑ or ↓ to select ♪, and press ⊕.

3 Select the item you want to adjust.
For example:

(1) To adjust bass, press ↑ or ↓ to move the cursor (▶) to BASS.

(2) Press ⊕.

4 Adjust the selected item:

(1) Press ↑, ←, ↓, or → to adjust the item.

(2) Press ⊕.
The new setting appears in the AUDIO menu.

For details on each item, see "Description of adjustable items" below.

5 To adjust other items, repeat steps 3 and 4.

6 Press MENU to return to the original screen.

Description of adjustable items

Item	Press ↑ or ← to	Press ↓ or → to
TREBLE	Decrease the treble response.	Increase the treble response.
BASS	Decrease the bass response.	Increase the bass response.
BALANCE	Emphasize the left speaker's volume.	Emphasize the right speaker's volume.

To restore the factory settings

Press RESET after displaying and selecting the AUDIO menu.
All of the settings are restored to the factory settings.

Note

- When SPEAKER (page 27) is OFF and AUDIO OUT (page 28) is in the FIXED condition, the volume, TREBLE, BASS, and BALANCE cannot be adjusted.

Using audio effect (SURROUND)

The audio effect (SURROUND) feature simulates sound reproduction with the atmosphere of a movie theater or a concert hall. Audio effect is only effective for stereo programs.

Using the ♪ (audio effect) button

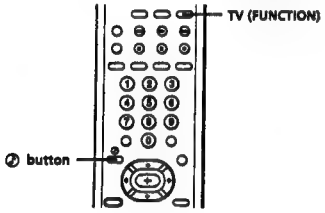

1 Press TV (FUNCTION).

2 Press ♪.
Each time you press the ♪ button, the display changes as follows:

SURROUND → SURROUND OFF

Using the menu to set audio effect

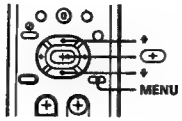

1 Press MENU.

2 Press ↑ or ↓ to select ♪, and press ⊕.

3 Press ↑ or ↓ to select EFFECT, and press ⊕.

4 Press ↑ or ↓ to select the audio effect mode, and press ⊕.

5 Press MENU to return to the original screen.

Selecting stereo or bilingual programs (MTS)

The Multichannel TV Sound (MTS) feature allows you to enjoy stereo sound or Second Audio Programs (SAP) of your choice. The initial setting is stereo sound (STEREO).

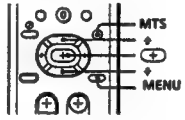

Press MTS repeatedly to select STEREO, SAP, or MONO.

STEREO→SAP→MONO

Choose	To
STEREO	Listen to stereo sound. The STEREO indicator on the projection TV lights up when a stereo broadcast is received.
SAP	Listen to bilingual programs. There is no sound when the SAP signal is not broadcasting.
MONO	Listen to monaural sound. Reduce noise during stereo broadcasts.

Note
- Stereo and SAP sounds are subject to program sources.

To set MTS using the menu

1 Press MENU.
2 Press ↑ or ↓ to select ♪, and press ⊕.
3 Press ↑ or ↓ to select MTS, and press ⊕.
4 Press ↑ or ↓ to select STEREO, SAP, or MONO.
5 Press MENU to return to the original screen.

Setting the speaker switch (SPEAKER)

You may switch off the projection TV speakers when, for example, you want to listen to the sound through a stereo system.

If you connect the Sony SAVA series speaker system to the AUDIO (VAR/FIX) OUT connectors, you can take advantage of the speakers' surround sound and super woofer mode. After making the connections (page 12), set SPEAKER to SAVA SPEAKER, then adjust SURROUND MODE or SUPER WOOFER MODE.

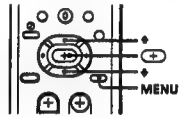

1 Press MENU.

2 Press ↑ or ↓ to select ♪, and press ⊕.

3 Press ↑ or ↓ to select SPEAKER, and press ⊕.

4 Press ↑ or ↓ to select ON, OFF, or SAVA SP, and press ⊕.

5 Press MENU to return to the original screen.

Choose	To
ON	Listen to the sound from the projection TV.
OFF	Turn off the projection TV speaker sound and listen to the projection TV's sound solely through the audio system speakers.
SAVA SP	Turn off the projection TV speaker sound and listen to the projection TV's sound through the Sony SAVA series speaker system. You can adjust volume, muting, surround modes, and super woofer mode with the remote control supplied with the projection TV.

To select surround sound or super woofer mode of the SAVA speaker system

After setting SPEAKER to SAVA SP, follow the procedure below.

Press ↑ or ↓ to select SURROUND MODE or SUPER WOOFER MODE, and press ⊕.
For details on each option, refer to the operating instructions of the speaker system.

Note
- This feature is only for Sony SAVA speaker system with an operation capability for KP-46C36, KP-48S35, KP-53S35, and KP-61S35.

Setting audio out (AUDIO OUT)

You can change AUDIO OUT to VARIABLE or FIXED when SPEAKER is set to OFF.
AUDIO OUT is variable when SPEAKER is set to ON.

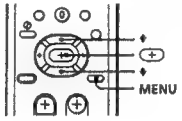

1 Press MENU.

2 Press ↑ or ↓ to select ♪, and press ⊕.

3 Press ↑ or ↓ to select AUDIO OUT, and press ⊕.

4 Press ↑ or ↓ to select VARIABLE or FIXED, and press ⊕.

VARIABLE: Sound output varied according to the projection TV settings. You can adjust the volume, bass, treble, and balance.
FIXED: Sound output is always fixed to a certain level. The volume, bass, treble, and balance are also fixed to the factory settings.

5 Press MENU to return to the original screen.

Note
- If AUDIO OUT appears in gray, set SPEAKER to OFF.

Setting daylight saving time (DAYLIGHT SAVING)

If your area uses daylight saving time, change DAYLIGHT SAVING setting depending on the season, before setting the current time.

Daylight saving start
- After the first Sunday in April, set DAYLIGHT SAVING to YES. Current time setting (right column) automatically moves one hour ahead.

Daylight saving end
- After the last Sunday in October, set DAYLIGHT SAVING to NO. Current time setting automatically moves one hour back.

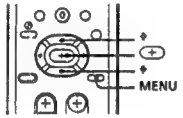

1 Press MENU.

2 Press ↑ or ↓ to select ⏲, and press ⊕.

3 Press ↑ or ↓ to select DAYLIGHT SAVING, and press ⊕.

4 Press ↑ or ↓ to select YES or NO, and press ⊕.

Choose	To
YES	Set for daylight saving start.
NO	Set for daylight saving end.

5 Press MENU to return to the original screen.

Setting the clock (CURRENT TIME SET)

Setting the clock enables you to turn the projection TV on and off with the timer. Make sure to set daylight saving time first.

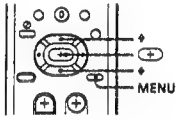

1 Press MENU.

2 Press ↑ or ↓ to select ⏲, and press ⊕.

3 Press ↑ or ↓ to select CURRENT TIME SET, and press ⊕.

4 Make sure the cursor (▶) is to the left of "--:-- AM," and press ⊕.

5 Set the current day of the week and time.
(1) Press ↑ or ↓ to set the day of the week, and press ⊕.

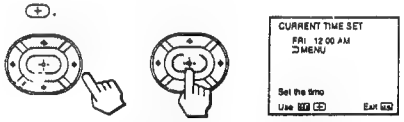

(2) Set the hour and minutes in the same way as in step (1). When you press ⊕ after setting the minutes, the clock starts.

6 Press MENU to return to the original screen.

Setting the timer to turn the projection TV on and off

(ON/OFF TIMER)

You can set the projection TV to turn on and off at the times you specify. Make sure the clock is set correctly. If it is not, set the clock first (page 29).

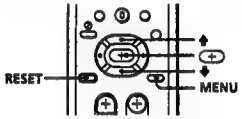

1 Press MENU.

2 Press ↑ or ↓ to select ⏲, and press ⊕.

3 Press ↑ or ↓ to select ON/OFF TIMER, and press ⊕.

4 Press ⊕ and enter the ON/OFF TIMER setting.

(1) Press ↑ or ↓ to set the day(s), and press ⊕.

Each time you press ↑ or ↓, the days cycle as follows:
EVERY SUN–SAT→EVERY MON–FRI→SUNDAY→...→SATURDAY→EVERY SUNDAY→...→EVERY SATURDAY

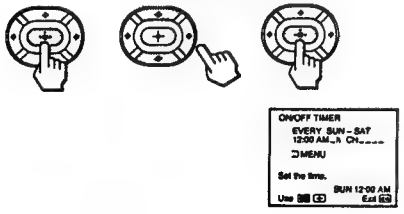

(2) Press ↑ or ↓ to set the time (hour then minutes) that you want to turn on the projection TV, and press ⊕.

(3) Press ↑ or ↓ to set the time duration, and press ⊕.

Each time you press ↑, the time duration increases by one hour up to a maximum of six hours.

(4) Press ↑ or ↓ to select the channel, and press ⊕.

The TIMER indicator on the projection TV lights up.

5 To set the other program, press ⊕, and repeat step 4.

6 Press MENU to return to the original screen.

One minute before the projection TV turns off, the message "TV will turn off soon." is displayed on the screen.

To cancel the timer

In step 3 or 4, press RESET.

Note

- If you unplug the projection TV or a power interruption occurs, the ON/OFF TIMER setting will be erased. Reset the current time, then set the timer.

Customizing the channel names

(CHANNEL CAPTION)

You can add a caption for up to 12 channels. This feature allows you to easily identify which channel you are watching. You can make your own caption.

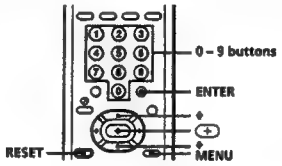

1 Press MENU.

2 Press ↑ or ↓ to select 🖶, and press ⊕.

3 Press ↑ or ↓ to select CHANNEL CAPTION, and press ⊕.

4 Press ⊕ and press ↑ or ↓ to select the channel that you want to caption, and press ⊕.

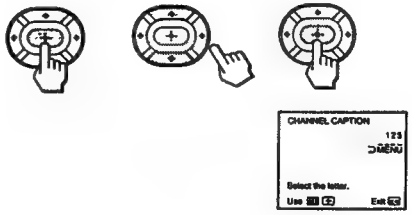

5 Enter the letters (up to four) to caption the channel:

(1) Press ↑ or ↓ to select the first letter.

Each time you press ↑ or ↓, the letter changes as follows:

0...9←→A...Z←→&./_(blank space)

(2) Press ⊕.

(3) Repeat steps (1) and (2) to select the remaining letters, and press ⊕.

6 Repeat steps 4 and 5 to caption other channels.

7 Press MENU to return to the original screen.

After you customize the channel, the channel caption appears green.

To erase a caption

In step 5, press RESET.

Notes

- If the CHANNEL CAPTION menu appears in gray, the projection TV is set to a video input, and you cannot select CHANNEL CAPTION. Press TV (black button) so that a channel number appears.
- If more than 90 seconds elapse after you press a button, the menu disappears automatically.
- The channel caption feature is not available for the AUX input.

Blocking out a channel (CHANNEL BLOCK)

The channel block feature allows you to prevent children from watching unsuitable programs. You can block out two channels.

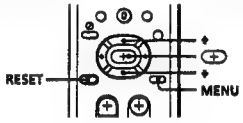

1 **Press MENU.**

2 **Press ↑ or ↓ to select 🖶, and press ⊕.**

3 **Press ↑ or ↓ to select CHANNEL BLOCK, and press ⊕.**

4 **Press ↑ or ↓ to select program 1 or 2, and press ⊕.**

5 **Press ↑ or ↓ to select the channel which you want to block out, and press ⊕.**

6 **Press MENU to return to the original screen.**

When you select the blocked channel, the message "BLOCKED" appears on the screen.

To cancel a CHANNEL BLOCK setting

In step 4 or 5, press RESET.

Note

- Once you use CHANNEL BLOCK, Caption Vision and XDS of the blocked channel and the selected channel output from MONITOR OUT are also blocked out.

Setting your favorite channels (FAVORITE CHANNEL)

The favorite channel feature allows your projection TV to memorize your favorite channels easily.
If you set to AUTO, the last five channels you selected with the 0 – 9 buttons are automatically set as your favorite channels. If you want to input your own selection of channels, set to MANUAL.

Setting your favorite channels

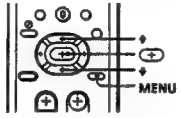

1 **Press MENU.**

2 **Press ↑ or ↓ to select 🖶, and press ⊕.**

3 **Press ↑ or ↓ to select FAVORITE CHANNEL, and press ⊕.**

4 **Press ⊕ and press ↑ or ↓ to select AUTO or MANUAL, and press ⊕.**

If you select AUTO, skip steps 5 and 6.
The last five channels you selected with the 0 – 9 buttons are automatically set as your favorite channels.

If you select MANUAL, the favorite channel numbers become white, indicating that favorite channels can be entered.

5 **Press ↑ or ↓ to select a favorite channel number, and press ⊕.**

6 **Press ↑ or ↓ to select the channel that you want to set as your favorite channel, and press ⊕.**

7 **Press MENU to return to the original screen.**

Notes

- If the FAVORITE CHANNEL menu appears in gray, the projection TV is set to a video input and you cannot select FAVORITE CHANNEL.
- If more than 90 seconds elapse after you press another button, the menu disappears automatically.
- The favorite channel feature is not available for the AUX input.

Selecting your favorite channel

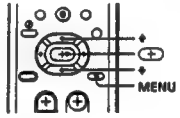

1 **Press ⊕.**

The FAVORITE CHANNEL menu appears.

2 **Press ↑ or ↓ to select the favorite channel you want to watch, and press ⊕.**

The selected channel appears on the screen.

To cancel the FAVORITE CHANNEL menu

Press ↑ or ↓ to select "Exit," and press ⊕.

Setting video labels (VIDEO LABEL)

The video label feature allows you to label each input mode so that you can easily identify the connected equipment. For example, you can label VIDEO 1 as VHS.

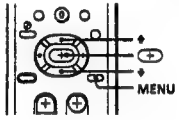

1 **Press MENU.**

2 **Press ↑ or ↓ to select 🖶, and press ⊕.**

3 **Press ↑ or ↓ to select VIDEO LABEL, and press ⊕.**

4 **Press ↑ or ↓ to select the input mode you want to label, and press ⊕.**

5 **Press ↑ or ↓ to select the label, and press ⊕.**

Each time you press ↑ or ↓, the label changes as follows:

VIDEO 1 *(for all models)*

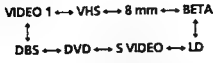

VIDEO 2 *(for KP-46C36 only)*

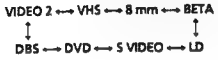

VIDEO 2 *(for KP-48S35/53S35/61S35 only)*

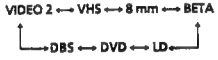

VIDEO 3 *(for KP-46C36 only)*

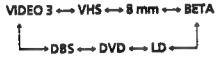

6 Repeat steps 4 and 5 to label other input modes.

Note
- If more than 90 seconds elapse before you press another button, the menu disappears automatically

Setting Caption Vision (CAPTION VISION)

Some programs are broadcast with Caption Vision. To display Caption Vision, select either CC1, CC2, CC3, CC4, TEXT1, TEXT2, TEXT3, or TEXT4 from the menu. CC1, CC2, CC3, or CC4 shows you on-screen version of the dialogue or sound effects of a program. (The mode should be set to CC1 for most programs.) TEXT1, TEXT2, TEXT3, or TEXT4 shows you on-screen information presented using either half or the whole screen. It is not usually related to the program.

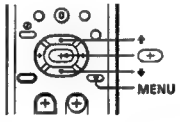

1 Press MENU.

2 Press ↑ or ↓ to select CC, and press ⊕.

3 Press ↑ or ↓ to select the caption type, and press ⊕.

4 Press MENU to return to the original screen.

To display Caption Vision
Press DISPLAY (See page 20 for details.)

Notes
- Poor reception of TV programs can cause errors in Caption Vision and XDS.
  Captions may appear with a white box or other errors instead of a certain word.
- XDS, Caption Vision, and the status display cannot be used at the same time.
- For details on XDS, see page 20.

Operating video equipment

You can use the supplied remote control to operate Sony or non-Sony video equipment that has an infrared remote sensor. For this operation, set the manufacturer's code number.

Setting the manufacturer's code

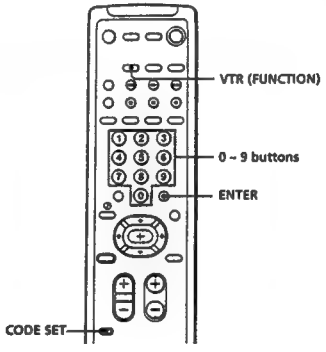

Press the CODE SET, VTR (FUNCTION), and 0 – 9 buttons to enter the manufacturer's code number (see the chart on page 35-36), then press ENTER.
For example, to operate a Sony 8 mm VCR, press CODE SET, VTR (FUNCTION), 3, 0, 2, and ENTER.

VCR manufacturer code numbers

Manufacturer	Code number
Sony	301, 302, 303
Aiwa	338
Audio Dynamic	314, 337
Bell & Howell (M. Wards)	330, 343
Brocsonic	319
Canon	309, 308
Citizen	332
Craig	315, 302, 332
Curtis Mathis	304, 338, 309
Daewoo	341, 312, 309
DBX	314, 336, 337
Dimensia	304
Emerson	319, 320, 316, 317, 318
Fisher	330, 334, 335, 333
Funai	338
General Electric	329, 304, 309
Goldstar	332
Hitachi	306, 304, 305
Instant Replay	309, 308
JC Penny	309, 305, 304, 330, 314, 336, 337
JVC	314, 336, 337
Kenwood	314, 336, 332, 337
LXI (Sears)	332, 305, 333, 334, 330, 335
Magnavox	308, 309
Marantz	314, 336, 337
Marta	332
Memorex	309, 335
Minolta	305, 304
Mitsubishi/MGA	323, 324, 325, 326
Multitech	325, 338, 321
NEC	314, 336, 337
Olympic	309, 308
Panasonic	308, 309, 306, 307
Pentax	305, 304
Philco	308, 309
Philips	308, 309
Pioneer	308
Quasar	308, 309
RCA/PROSCAN	304, 305, 308, 309, 311, 312, 313
Realistic	309, 330, 328, 335, 324, 338
Sansui	314
Singer	315
Samsung	322, 313, 321
Sanyo	330, 335
Scott	312, 313, 321, 335, 323, 324, 325, 326
Sharp	327, 328
Shintom	315
Signature 2000 (M. Wards)	338, 327
Sylvania	308, 309, 338
Symphonic	338
Tashiro	332
Tatung	314, 336, 337
Teac	314, 336, 338, 337
Technics	309, 308
Toshiba	312, 311
Wards	327, 328, 335, 331, 332
Yamaha	330, 314, 336, 337
Zenith	331

MDP manufacturer code numbers

Manufacturer	Code number
Sony	701
Kenwood	707
Magnavox	703
Maranz	702
Mitsubishi	702
Panasonic	704
Philips	703
Pioneer	702
RCA	702
Sanyo	706
Sharp	705
Yamaha	703

Notes

- If more than one code number is listed, try entering them one by one, until you come to the correct code for your equipment.
- In some rare cases, you may not be able to operate your non-Sony video equipment with the supplied remote control. This is because your equipment may use a code that is not included with this remote control. In this case, please use the equipment's own remote control unit.
- The code numbers for Sony equipment are assigned at the factory as follows:

VHS VCR	301 (preset code for the supplied remote control)
8 mm VCR	302
Beta, ED Beta VCRs	303

- Whenever you remove the batteries — to replace them, for example — if too much time is taken, the code number may revert to the factory setting and must be reset.

Operating video equipment

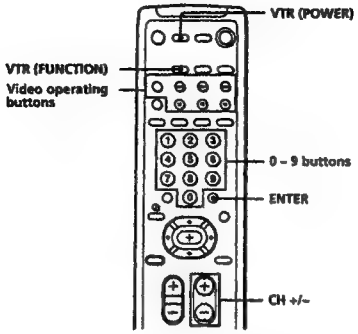

Use the video operating buttons on the remote control to operate the video equipment. Press VTR (FUNCTION) before operating the video equipment.

Operating a VCR	Buttons on the remote control
To turn on or off	Press VTR (POWER).
To select a channel directly	Press the 0 – 9 buttons.
To change channels	Press CH +/–.
To record	Press ► while pressing ●. First release ►, then release ●.
To play	Press ►.
To stop	Press ■.
To fast forward	Press ►►.
To rewind the tape	Press ◄◄.
To pause	Press II. To resume normal playback, press again.
To search the picture forward or backward	Press ►► or ◄◄ during playback. To resume normal playback, release the button.
To change input mode	Press TV/VTR.

Operating an MDP	Buttons on the remote control
To turn on or off	Press VTR (POWER).
To play	Press ►.
To stop	Press ■.
To pause	Press II. To resume normal playback, press again.
To search the picture forward or backward	Keep pressing ►► or ◄◄ during playback. To resume normal playback, release the button.
To search the chapter forward and backward	Press CH +/–.

Note

- If the video equipment does not have a certain function, the corresponding button on this remote control will not operate.

Operating a cable box or DBS receiver

You can program the supplied remote control to operate a cable box or DBS receiver. Follow the procedures below to set the manufacturer's code number in the remote control.

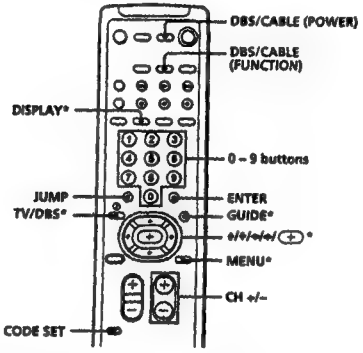

* The TV/DBS, GUIDE, DISPLAY, ↑/↓/←/→/⊕, and MENU buttons can be used only with a DBS receiver.

1 Turn off the equipment you want to set up, and press DBS/CABLE (FUNCTION).

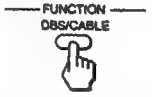

2 Press the CODE SET, DBS/CABLE (FUNCTION), and 0 – 9 buttons to enter the manufacturer's code number (see the chart on the right column), then press ENTER. For example, to program your remote control to operate a Sony DBS receiver, press CODE SET, DBS/CABLE (FUNCTION), 8, 0, 1, and ENTER.

3 Press DBS/CABLE (POWER) to turn on the cable box or DBS receiver.

4 Use the cable box/DBS control buttons to check if the code number works.
For example, to operate a cable box or DBS receiver, you can use the DBS/CABLE (POWER), JUMP, CH +/–, 0 – 9 and ENTER buttons.

Note

- If the cable box or DBS receiver does not have a certain function, the corresponding button on this remote control will not operate.

To operate the projection TV
Press TV (FUNCTION). Then use the projection TV control buttons to control the projection TV.

For more details on operating the cable box or DBS receiver
Refer to the operating instructions that come with the equipment.

If the remote control doesn't work

- First, try repeating the setup procedures using the other codes listed for your equipment.

Manufacturer code numbers (cable box)

Manufacturer	Code number
Hamlin/Regal	222, 223, 224, 225, 226
Jerrold/G. I.	201, 202, 203, 204, 205, 206, 207, 208, 218
Oak	227, 228, 229
Panasonic	219, 220, 221
Pioneer	214, 215
Scientific Atlanta	209, 210, 211
Tocom	216, 217
Zenith	212, 213

Manufacturer code numbers (DBS receiver)

Manufacturer	Code number
Sony	801 (preset code for the supplied remote control)
RCA	802

Notes

- If more than one code number is listed, try entering them one by one until you come to the correct code for your equipment.
- If you enter a new code number, the code number you previously entered at that setting is erased.
- In some rare cases, your equipment may use a code that is not provided with this remote control and you may not be able to operate your equipment with the supplied remote control. In this case, use the equipment's own remote control unit.
- Whenever you remove the batteries — to replace them, for example — if too much time is taken, the code numbers may revert to the factory setting and must be reset.

Troubleshooting

If the problem persists after trying the methods below, contact your nearest Sony dealer.

No picture (screen not lit), no sound
- ➡ Make sure the power cord is connected securely.
- ➡ Operate with the buttons on the projection TV.
- ➡ Insert the batteries in the remote control with the correct polarity.
- ➡ Replace the batteries with new ones if they are weak.
- ➡ Check to see if the TV/VIDEO setting is correct: when watching TV, set to TV, and when watching video tapes, set to VIDEO1, 2, or 3 (*for KP-41T35 only*).
- ➡ Try another channel. It could be station trouble.
- ➡ Perform AUTO SET UP again using the SETUP button to return to the factory preset condition. (page 14)

Poor or no picture (screen lit), good sound
- ➡ Adjust PICTURE in the VIDEO menu. (page 23)
- ➡ Adjust BRIGHTNESS in the VIDEO menu. (page 23)
- ➡ Adjust convergence. (page 16)
- ➡ Check antenna/cable connections. (page 6)
- ➡ Perform AUTO SET UP again using the SETUP button to return to the factory preset condition. (page 14)
- ➡ Remove objects from the front of the projection TV.

Good picture, no sound
- ➡ Press MUTING so that "MUTING" disappears from the screen. (page 19)
- ➡ Check the MTS setting in the AUDIO menu. (page 27)
- ➡ Make sure SPEAKER is set to ON in the AUDIO menu. (page 27)
- ➡ Perform AUTO SET UP again using the SETUP button to return to the factory preset condition. (page 14)

No color
- ➡ Adjust the COLOR in the VIDEO menu. (page 23)
- ➡ Confirm that black and white program is not being broadcast.
- ➡ Perform AUTO SET UP again using the SETUP button to return to the factory preset condition. (page 14)

Only snow and noise appear on the screen
- ➡ Check the CABLE setting in the SET UP menu. (page 17)
- ➡ Check the antenna/cable connections. (page 6)
- ➡ Make sure the channel is broadcasting programs.
- ➡ Press TV (black button) to change the input mode. (page 20)

Dotted lines or stripes
- ➡ Adjust the antenna.
- ➡ Move the projection TV away from noise sources such as cars, neon signs, and hair-dryers.

Double images or ghosts
- ➡ Use a highly directional outdoor antenna or a cable (when the problem is caused by reflections from nearby mountains or tall buildings).

Cannot operate menu
- ➡ If the item you want to choose appears in gray, you cannot select it. Press TV/VIDEO correctly.
- ➡ Check the CABLE setting in the SET UP menu. (page 17)

Cannot receive upper channels (UHF) when using an antenna
- ➡ Make sure CABLE is OFF in the SET UP menu. (page 17)
- ➡ Use AUTO PROGRAM to add receivable channels that are not presently in projection TV memory. (pages 14, 18)

Cannot receive any channels when using cable TV
- ➡ Make sure CABLE is ON in the SET UP menu. (page 17)
- ➡ Use AUTO PROGRAM to add receivable channels that are not presently in projection TV memory. (pages 14, 18)

Remote control does not operate
- ➡ Batteries could be weak. Replace the batteries. (page 13)
- ➡ Make sure the projection TV's power cord is connected securely to the wall outlet.
- ➡ Press TV (FUNCTION) when operating your projection TV.
- ➡ Are fluorescent lights too close to the projection TV? Move them at least 3-4 feet away from the projection TV.

Cannot gain enough volume when using a cable box
- ➡ Increase the volume at the cable box. Then press TV (FUNCTION) and adjust the projection TV's volume.

The projection TV needs to be cleaned
- ➡ Clean the projection TV with a soft dry cloth. Never use strong solvents such as thinner or benzine, which might damage the finish of the cabinet.

Index to parts and controls

This section briefly describes the buttons and controls on the projection TV and on the Remote control. For more information, refer to the pages next to each description.

Projection TV — Front

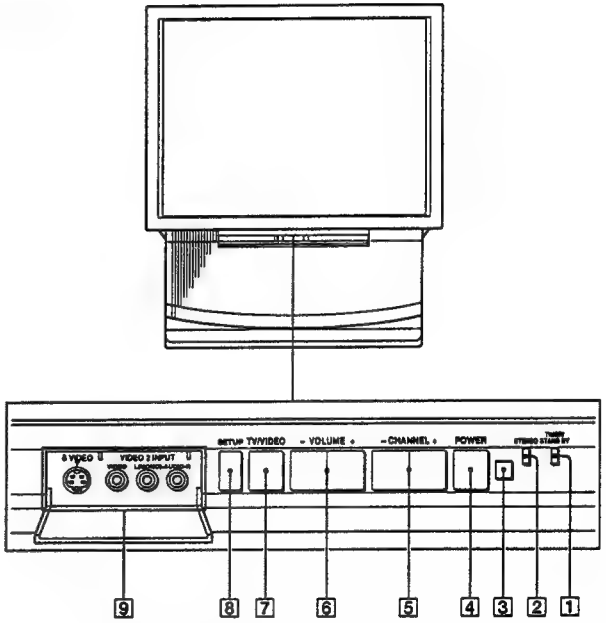

1. TIMER/STANDBY indicator (pages 19, 30)
2. STEREO indicator (page 27)
3. Remote sensor
4. POWER switch (page 14)
5. CHANNEL +/– buttons (page 14)
6. VOLUME +/– buttons (page 14)
7. TV/VIDEO button (page 14, 15)
8. SETUP button (page 14)
9. S VIDEO/VIDEO 2 INPUT (VIDEO/AUDIO L(MONO)/R) jacks (*for KP-46C36 only*) (page 10)

Remote control

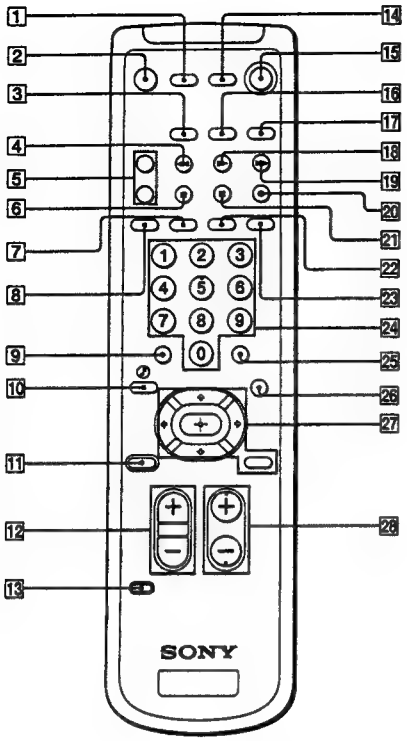

1 VTR (POWER) switch (page 36)
2 MUTING button (page 19)
3 VTR (FUNCTION) button (page 35)
4 FREEZE button (page 22)
5 TV/VTR CH +/– buttons (Yellow labelled button) (page 21)
6 POSITION button (page 22)
7 DISPLAY button (page 20)
8 SLEEP button (page 20)
9 JUMP button (page 19)
10 TV/DBS button (page 26, 37)
11 RESET button (page 23)
12 VOL (volume) +/– buttons (page 19)
13 CODE SET button (page 35)
14 DBS/CABLE (POWER) switch (page 37)
15 TV (POWER) switch (page 19)
16 DBS/CABLE (FUNCTION) button (page 37)
17 TV (FUNCTION) button (pages 15, 19)
18 SWAP button (page 22)
19 PIP button (page 21)
20 TV/VIDEO button (yellow labelled button) (page 21)
21 AUDIO button (page 21)
22 TV/VIDEO button (page 20)
23 TV button (black button) (page 20)
24 0 – 9 buttons (page 16)
25 ENTER button (page 16)
26 MTS/GUIDE button (page 27, 37)
27 Menu operation buttons (page 15)
MENU button
↑/←/↓/→/ buttons
button
28 CH (channel) +/– buttons (pages 16, 19)

SECTION 2
DISASSEMBLY

2-1. REAR BOARD REMOVAL

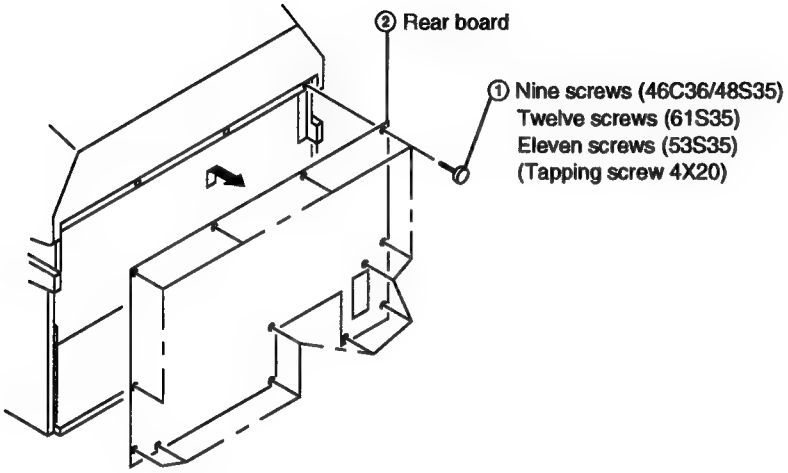

2-2. CHASSIS ASSY REMOVAL

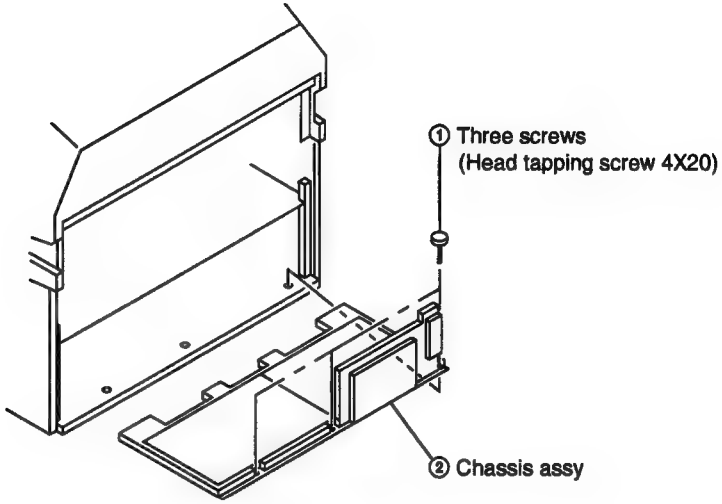

2-3. SERVICE POSITION

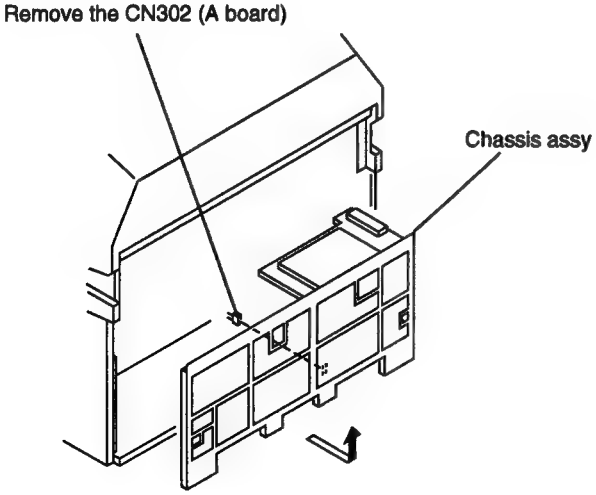

2-4-1. HA BOARD REMOVAL (KP-46C36)

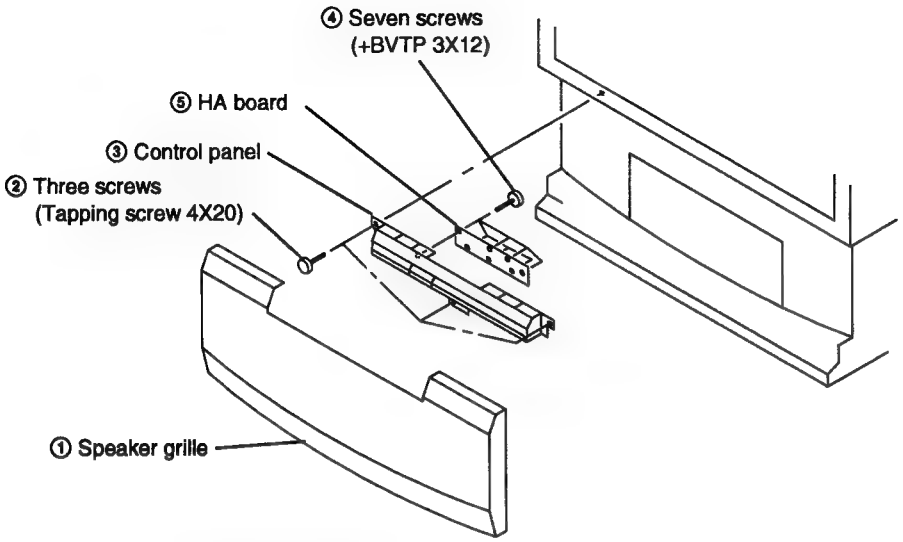

2-4-2. HA BOARD REMOVAL (KP-48S35/53S35/61S35)

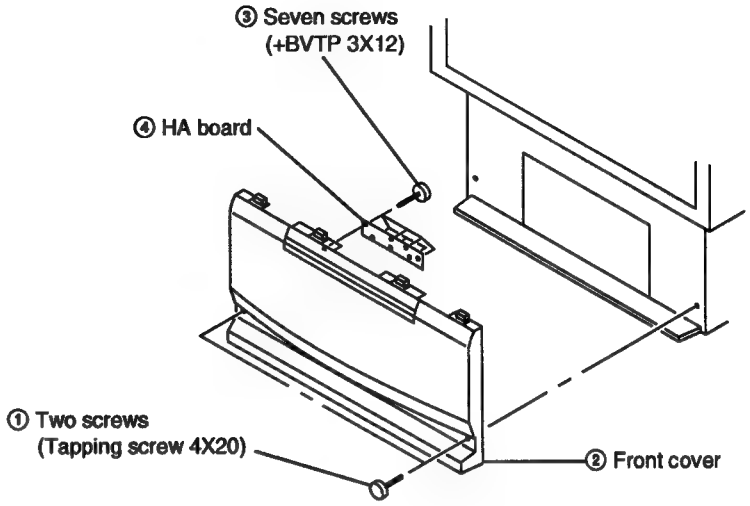

2-5-1. BEZNET ASSY REMOVAL (KP-46C36/48S35/53S35)

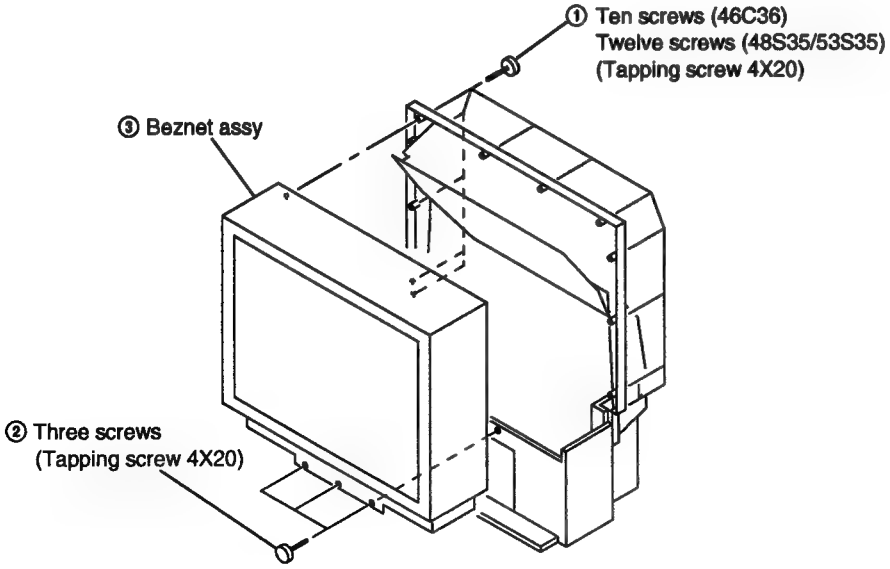

2-5-2. SCREEN FRAME ASSY REMOVAL (KP-61S35)

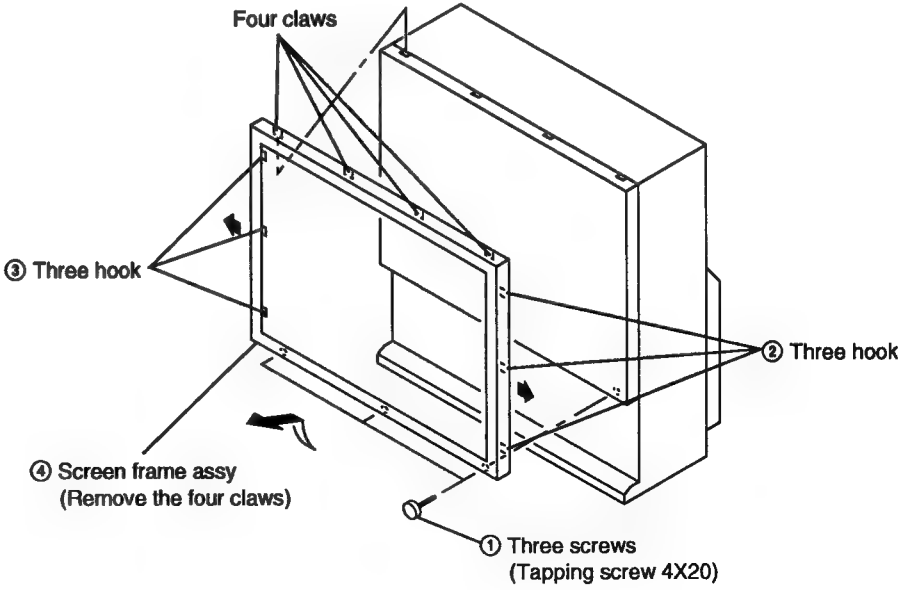

2-6-1. MIRROR COVER ASSY REMOVAL (KP-46C36/48S35/53S35)

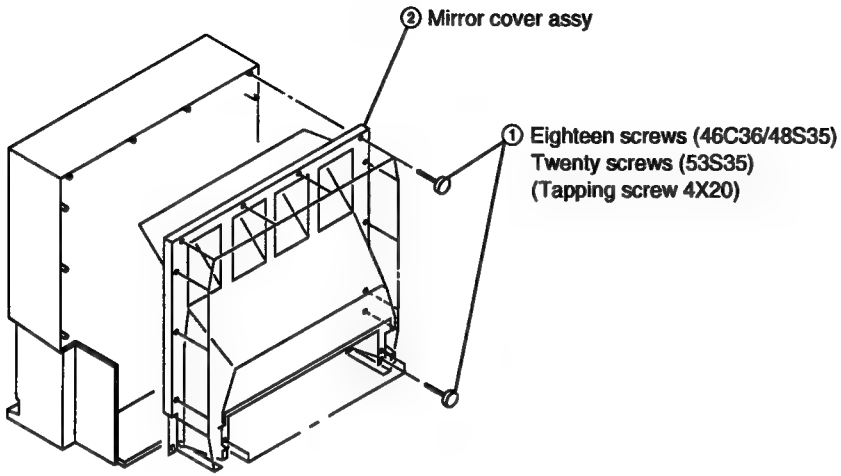

2-6-2. REFLECTION MIRROR REMOVAL (KP-61S35)

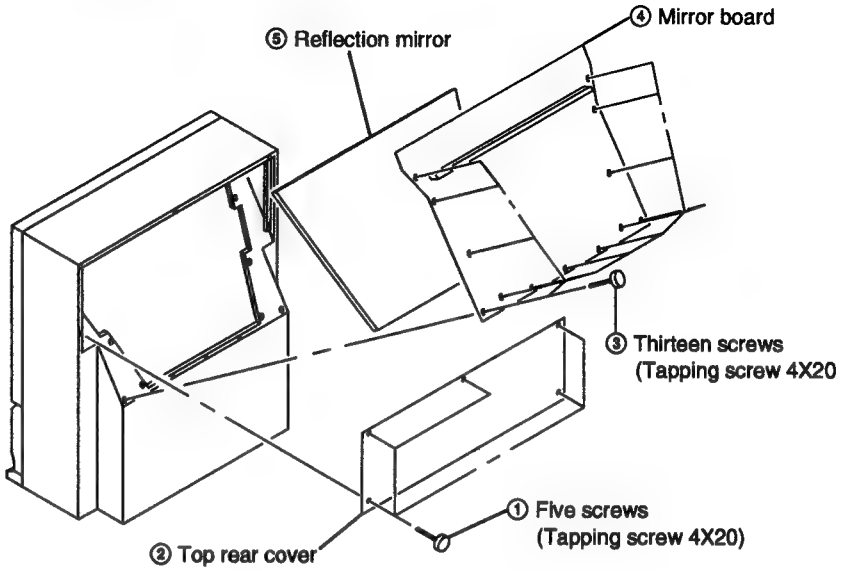

2-7. HIGH-VOLTAGE CABLE INSTALLATION AND REMOVAL

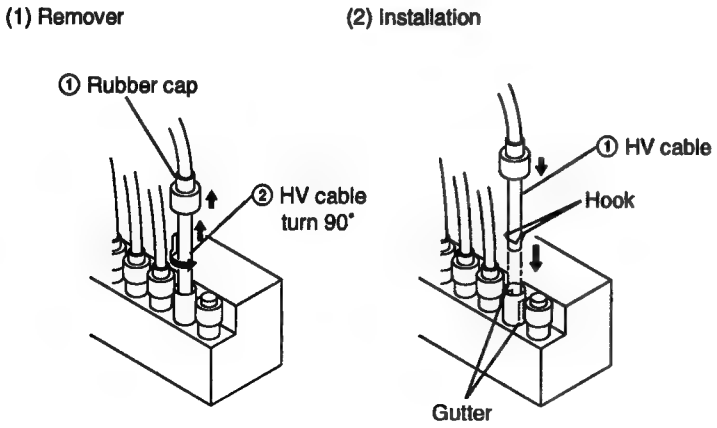

2-8. PICTURE TUBE REMOVAL

CAUTION: Removing the arrow-marked screws is strictly inhibited.
If removed, it may cause liquid spill.

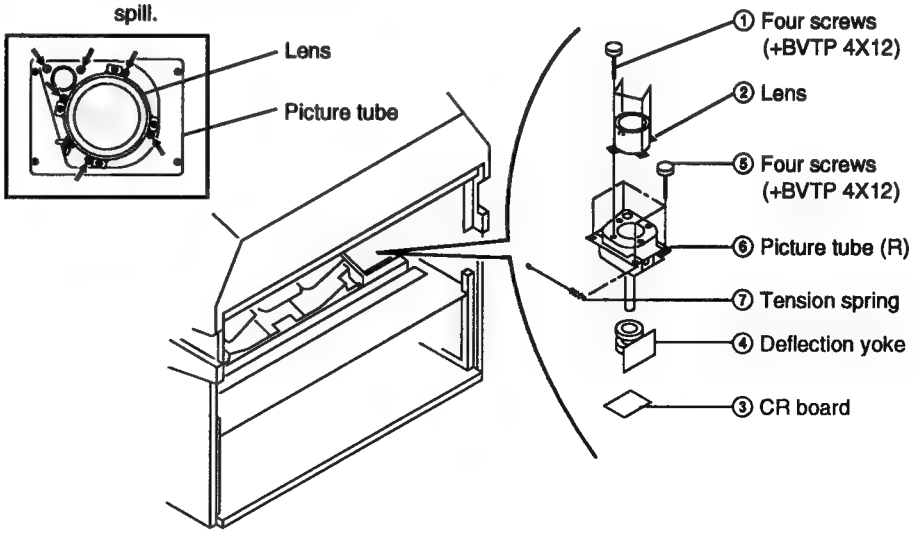

2-9-1. SERVICE STAY ASSY HOW TO USE AND CARRY BACK SERVICE STAY ASSY.

SERVICE STAY ASSY

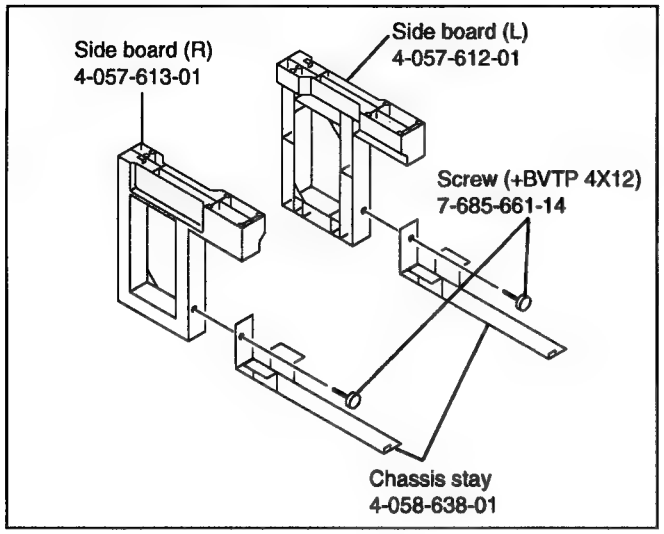

2-9-2. PICTURE TUBE BRACKET ASSY REMOVAL

- **Disassemble HA board and speaker cord.**
- **Disassemble all the harness from purse lock.**

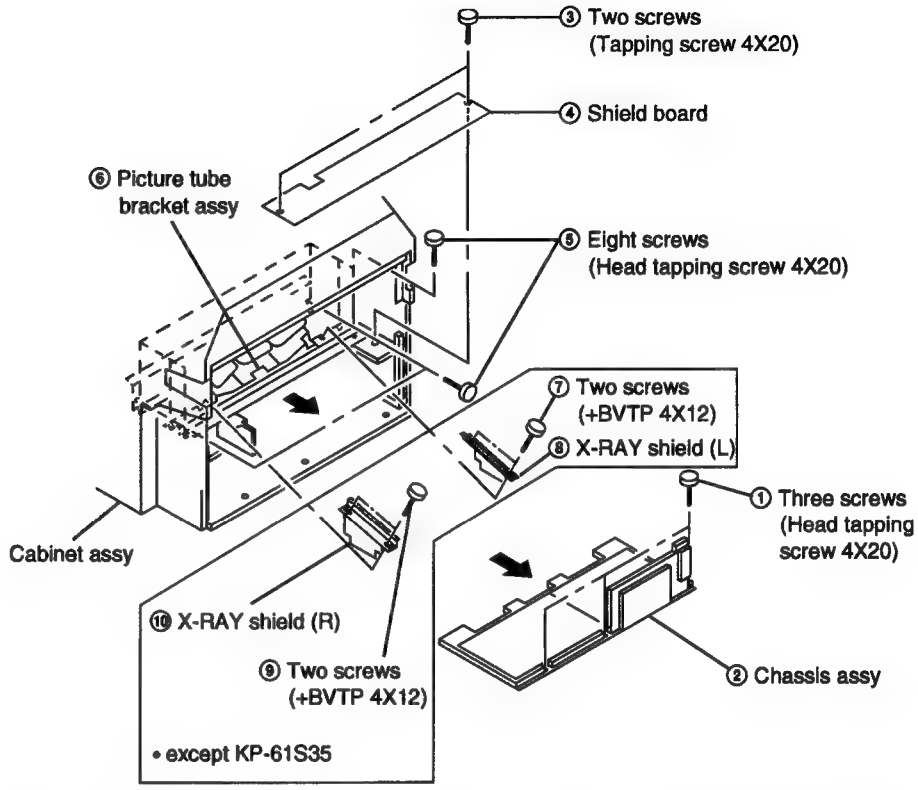

1) Remove ① three screws (head tapping screw 4X20) and pull out ② chassis assy from cabinet assy.
2) Remove ③ two screws (tapping screw 4X20) and remove ④ shield board.
3) Remove ⑤ eight screws (head tapping screw 4X20) and release ⑥ picture tube bracket assy from cabinet assy.

4) Remove ⑦ two screws (+BVTP 4X12) and remove ⑧ X-RAY shield (L).
5) Remove ⑨ two screws (+BVTP 4X12) and remove ⑩ X-RAY shield (R).
• except KP-61S35

2-9-3. SETTING OF SERVICE STAY ASSY. (KP-46C36/48S35/53S35)

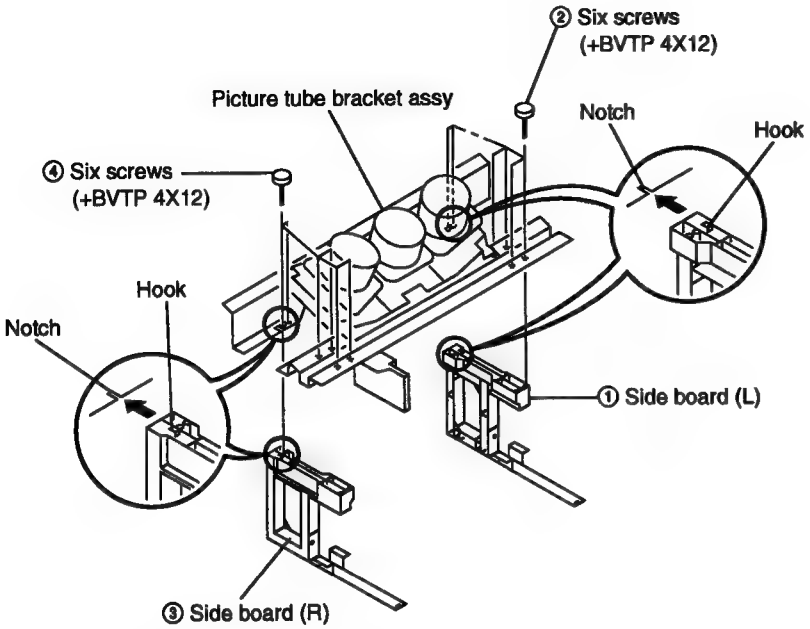

1) Lift up picture tube bracket assy and fit the hook of ① side board (L) to the notch on the assy. Then fix then with ② six screws (+BVTP 4X12).
2) Lift up picture tube bracket assy and fit the hook of ③ side board (R) to the notch on the assy. Then fix then with ④ six screws (+BVTP 4X12).

2-9-4. INSTALL A CHASSIS ASSY

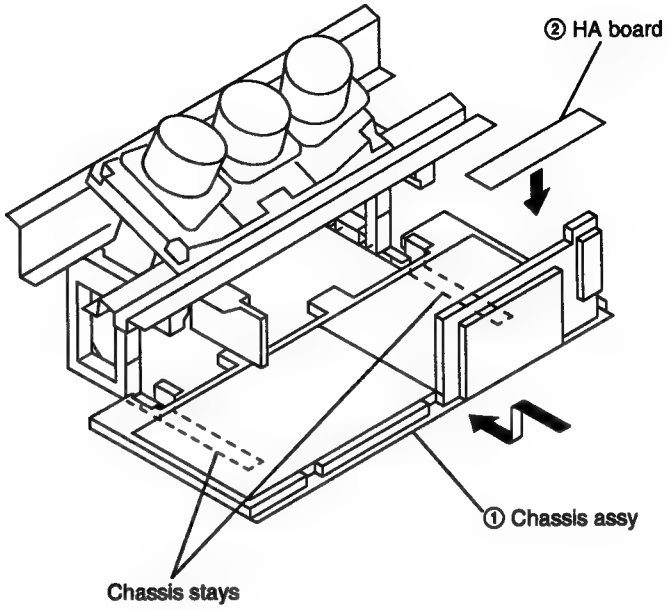

1) Put ① chassis assy on chassis stays.
2) Put ② HA board on ① chassis assy.
3) You can carry the chassis assy in this condition.

MEMO

SECTION 3
SET-UP ADJUSTMENTS

ADJUSTMENT ITEM AND PROCEDURE	EQUIPMENT AND SIGNAL	MEASUREMENT POSITION	ADJUSTMENT LOCATION	ILLUSTRATION AND SHAPE AND NUMBER
SCREEN VOLTAGE ADJUSTMENT (ROUGH ALIGNMENT) 1. Turn the red VR on the FOCUS block all the way to the left and then gradually turn it to the right until the point where you can see the retrace line. 2. Next gradually turn it to the left to the position where the retrace line disappears.	Monoscope Pattern		PICTURE .....minimum BRIGHTNESS .....50% SCREEN (G2)	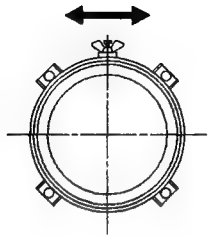
FOCUS LENS ADJUSTMENT 1. Loosen the lens screw. 2. Set in service mode. 3. Use VP on the service mode menu to show only the green colour. 4. Press the Commander Menu button and select FEATURES and CONVERGENCE to display the test signal on the screen. 5. Rotate the green lens and align with the optimal focus point from the test signal. 6. Use RG-RH from the service mode menu to set to green and red. 7. Disply the test signal and rotate the red lens to obtain the optimum focus at the point where the red and green spots overlap. 8. Use RG-BH from the service mode menu to set to red and blue. 9. Disply the test signal and rotate the blue lens to obtain the optimum focus at the point where the blue and red spots overlap. 10. Tighten the lens screw.				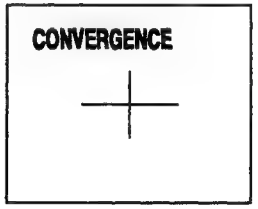
SCREEN (G2) ADJUSTMENT 1. Select VIDEO mode without signals. 2. Connect the G2 JIG between TP732 (200V) and TP733 (GND) on the CG Board. 3. Connect an oscilloscope to the TP701 (KR), TP702 (KG) and TP703 (KB) of CR board, CG board and CB board. 4. Adjust 170~173V (KR, KG, KB) by rotating screen VR on the focus block.				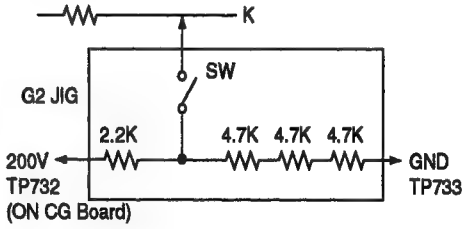 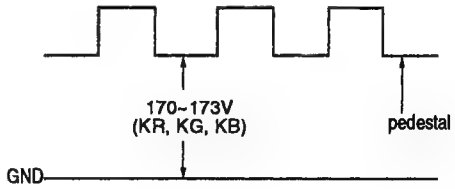

ADJUSTMENT ITEM AND PROCEDURE	EQUIPMENT AND SIGNAL	MEASUREMENT POSITION	ADJUSTMENT LOCATION	ILLUSTRATION AND SHAPE AND NUMBER
FOCUS VR ADJUSTMENT 1. Set in service mode. 2. Use VP on the service mode menu to show only the green colour. 3. Press the Commander Menu button (convergence) and output the test signal. 4. Rotate the green VR on the FOCUS block and align to obtain the optimal focus point. 5. Use RG-RH from the service mode menu to set to green and red. 6. Disply the test signal and rotate the red VR to obtain the optimum focus at the point where the red and green spots overlap. 7. Use RG-BH from the service mode menu to set to red and blue. 8. Disply the test signal and rotate the blue VR aligning to obtain the optimum focus at the point where the blue and green spots overlap.				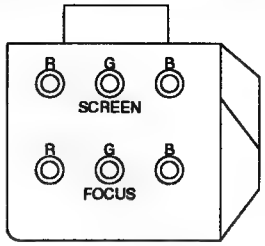 FOCUS block 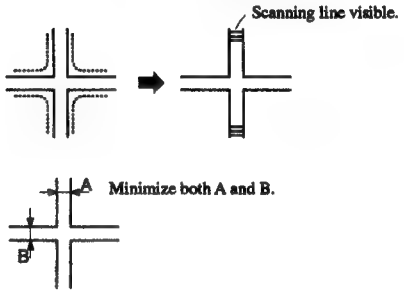
DEFLECTION YOKE TILT ADJUSTMENT 1. Set in service mode. 2. Set to receive the monoscope signal. 3. Use VP on the service mode menu to show only the green colour. 4. Loosen the deflection yoke set screw and align the tilt of the deflection yoke so that the bars at the centre of the monoscope pattern are horizontal. 5. After aligning the deflection yoke, fasten it securely to the funnel-shaped portion (neck) of the CRT. 6. The tilt of the deflection yoke for red is aligned with RG-RH on the service mode menu, and the tilt on the deflection yoke for blue is aligned with RG-BH on the service menu, is aligned the same as was done for green.	Monoscope pattern			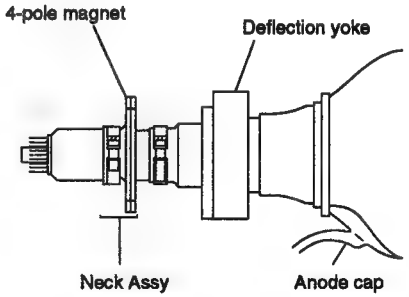

ADJUSTMENT ITEM AND PROCEDURE	EQUIPMENT AND SIGNAL	MEASUREMENT POSITION	ADJUSTMENT LOCATION	ILLUSTRATION AND SHAPE AND NUMBER
4-POLE MAGNET ADJUSTMENT 1. Set in service mode. 2. Set to receive the dot pattern signal. 3. Place the caps on the red and blue lens so that only the green colour is showing. 4. Turn the green VR on the focus block to the left and set to underfocus to enlarge the spot. 5. Now align the 4-Pole Magnet so that the enlarged spot becomes a perfect circle.	Dot pattern		4-pole magnet	Use the center dot 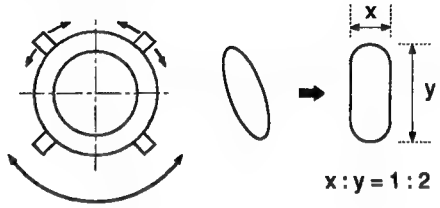
DEFOCUS ADJUSTMENT 1. Receive the crosshatch signal. 2. Adjust the Blue FOCUS knob so that the crosshatch pattern vertical line width is as in the figure on the right. 3. Blue only defocus Adjustment.	Crosshatch pattern		FOCUS VR • BLUE	• Focus adjustment point 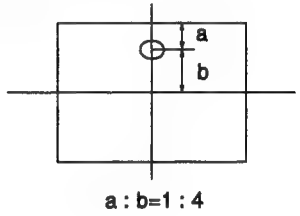

ELECTRICAL ADJUSTMENT BY REMOTE COMMANDER

By using Remote Commander (RM-Y136A),all circuit adjustments can be made.

NOTE : Test Equipment Required.

1. Pattern Generator
2. Frequency counter
3. Digital multimeter
4. Audio oscillator

1. METHOD OF SETTING THE SERVICE ADJUSTMENT MODE

SERVICE MODE PROCEDURE

1. Standby mode. (Power off)
2. [DISPLAY] → [5] → [VOL (+)] → [TV POWER] on the Remote Commander.

([+] → [5] → ◿ → [ ]) (Press each button within a second.)

SERVICE MODE ADJUSTMENT

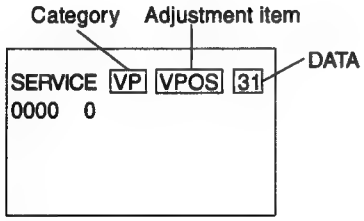

3. The CRT displays the item being adjusted.
4. Press [1] or [4] on the Remote Commander to select the adjustment item.
5. Press [3] or [6] on the Remote Commander to change the data.
6. Press [2] or [5] on the Remote Commander to select the category.
7. If you want to recover the latest values press [7] then [ENTER] to read the memory.
8. Press [MUTING] then [ENTER] to write into memory.

SERVICE ADJUSTMENT MODE MEMORY

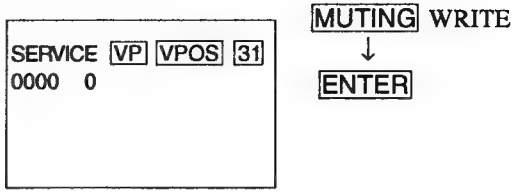

8. Press [8] then [ENTER] on the Remote Commander to initialize.
9. Turn set off and on to exit.

2. MEMORY WRITE CONFIRMATION METHOD

1. After adjustment, remove the plug from AC outlet, and then replace the plug in AC outlet again.
2. Turn the power switch ON and set to Service Mode.
3. Call the adjusted items again and confirm they were adjusted.

3. ADJUST BUTTONS AND INDICATOR

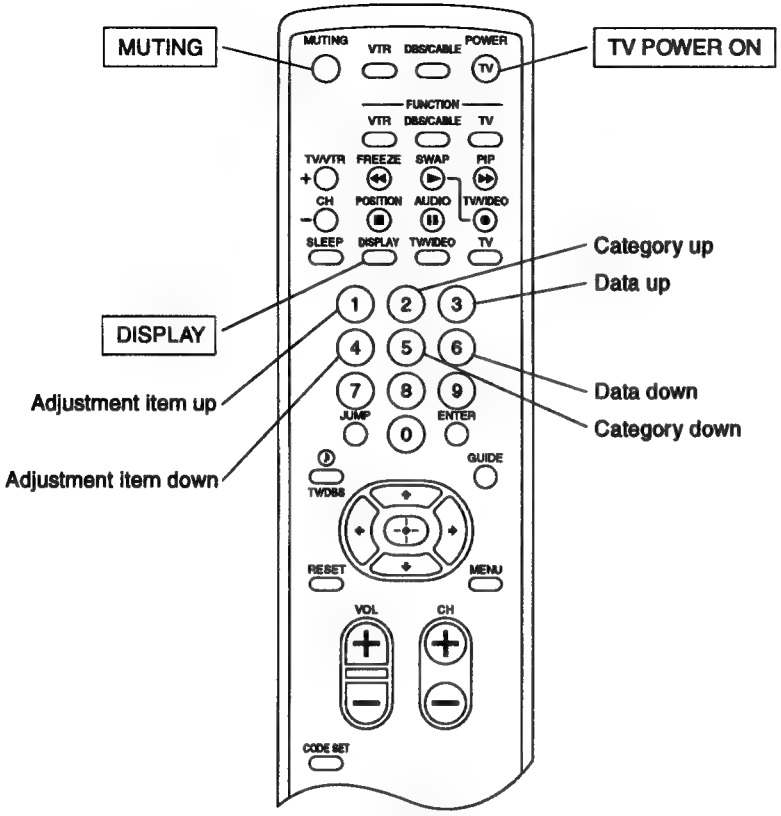

4. SERVICE MODE LIST

VP

Category	Adjustment item	Standard data	Note	Device
VP	VPOS		V SHIFT	
	VSIZ		V SIZE	
	VCOM	0	HV-COMP-V	
	VLIN	7	V LIN	
	VSCO	7	S CORRECTION	
	HPOS	7	H SHIFT	
	HSIZ		H SIZE	
	PAMP		PIN AMP	
VP	UPIN	7	UPPER CORNER PIN	
	LPIN	7	LOWER CORNER PIN	
	PPHA	7	H TRAPEZOID	
	AFC	2	AFC LOOP GAIN	
	VBOW	7	V BOW	
	VANG	7	V ANGLE	
	REF	3	AKB REFERENCE	
	GDRV		GREEN DRIVE	
	BDRV		BLUE DRIVE	
	GCUT		GREEN CUT OFF	
	BCUT		BLUE CUT OFF	
	SCON		SUB CONTRAST	
	SHUE		SUB HUE	
	SCOL		SUB COLOR	
	SBRT		SUB BRIGHTNESS	
	SSHP	7	SUB SHARPNESS	
	GMMA	1	GAMMA LEVEL	
	CDM2	0	COUNT DOWN MODE 2	
	DPIX	1	DYNAMIC PICTURE	
	Y-DC	1	DC TRANSMISSION RATIO	
	ABLM	1	ABL MODE	
	AXIS	0	R-Y, G-Y AXIS	
	NOTC	0	C TRAP	
	CROM	7	C TRAP F0	
	TOT	0	C TOT FILTER	
	PREL	3	PRE/OVER LEVEL	
	SHPF	1	SHARPNESS F0	
	RON		RED ON/OFF	
	GON		GREEN ON/OFF	
	BON		BLUE ON/OFF	
	DCOL		DYNAMIC COLOR	
	CDMD	0	V COUNT DOWN	
	LBLK	13	H BLK WIDTH LEFT SIDE	
	RBLK	13	H BLK WIDTH RIGHT SIDE	

AP

Category	Adjustment item	Standard data	Note	Device
AP	SVOL	0	SUB VOLUME	
	SBAL	0	SUB BLANCE	
	SBAS	7	SUB BASS	
	STRE	7	SUB TREBLE	

RG

Category	Adjustment item	Standard data	Note	Device
RG	GH CENT		GREEN H SENT	
	GH SKEW		GREEN H SKEW	
	GH BOW		GREEN H BOW	
	GH 4BOW		GREEN H 4TH BOW	
	GH SIZE		GREEN H SIZE	
	GH LIN		GREEN H LINEARITY	
	GH MSIZ		GREEN H MID SIZE	
	GH MLIN		GREEN H MID LINEARITY	
	GH KEY		GREEN H KEY	
	GH SSKW		GREEN H SUB SKEW	
	GH MPIN		GREEN H MID PIN	
	GH PIN		GREEN H PIN	
	GH SBOW		GREEN H SUB BOW	
	GH MBOW		GREEN H MID BOW	
	GH 4PIN		GREEN H 4TH PIN	
	GH 4BOW		GREEN H 4TH BOW	
	GV CENT		GREEN V CENT	
	GV SKEW		GREEN V SKEW	
	GV BOW		GREEN V BOW	
	GV SIZE		GREEN V SIZE	
	GV LIN		GREEN V LINEARITY	
	GV MSIZ		GREEN V MID SIZE	
	GV MKEY		GREEN V MID KEY	
	GV KEY		GREEN V KEY	
	GV SSKW		GREEN V SUB SKEW	
	GV MPIN		GREEN V MID PIN	
	GV PIN		GREEN V PIN	
	GV SBOW		GREEN V SUB BOW	
	GV WAVE		GREEN V WAVE	
	GV 4PIN		GREEN V 4TH PIN	
	RH CENT		RED H CENT	
	RH SKEW		RED H SKEW	
	RH BOW		RED H BOW	
	RH 4BOW		RED H 4TH BOW	
	RH SIZE		RED H SIZE	
	RH LIN		RED H LINEARITY	
	RH MSIZ		RED H MID SIZE	
	RH MLIN		RED H MID LINEARITY	
	RH KEY		RED H KEY	
	RH SSKW		RED H SUB SKEW	
	RH MPIN		RED H MID PIN	
	RH PIN		RED H PIN	
	RH SBOW		RED H SUB BOW	
	RH MBOW		RED H MID BOW	

Category	Adjustment item	Standard data	Note	Device
RG	RH 4PIN		RED H 4TH PIN	
	RH 4BOW		RED H 4TH BOW	
	RV CENT		RED V CEVT	
	RV SKEW		RED V SKEW	
	RV BOW		RED V BOW	
	RV SIZE		RED V SIZE	
	RV LIN		RED V LINEARITY	
	RV MSIZ		RED V MID SIZE	
	RV MKEY		RED V MID KEY	
	RV KEY		RED V KEY	
	RV SSKW		RED V SUB SKEW	
	RV MPIN		RED V MID PIN	
	RV PIN		RED V PIN	
	RV SBOW		RED V SUB BOW	
	RV WAVE		RED V WAVE	
	RV 4PIN		RED V 4TH PIN	
	RV WING		RED V WING	
	BH CENT		BLUE H CENT	
	BH SKEW		BLUE H SKEW	
	BH BOW		BLUE H BOW	
	BH 4BOW		BLUE H 4TH BOW	
	BH SIZE		BLUE H SIZE	
	BH LIN		BLUE H LINEARITY	
	BH MSIZ		BLUE H MID SIZE	
	BH MLIN		BLUE H MID LINEARITY	
	BH KEY		BLUE H KEY	
	BH SSKW		BLUE H SUB SKEW	
	BH MPIN		BLUE H MID PIN	
	BH PIN		BLUE H PIN	
	BH SBOW		BLUE H SUB BOW	
	BH MBOW		BLUE H MID BOW	
	BH 4PIN		BLUE H 4TH PIN	
	BH 4BOW		BLUE H 4TH BOW	
	BV CENT		BLUE V CENT	
	BV SKEW		BLUE V SKEW	
	BV BOW		BLUE V BOW	
	BV SIZE		BLUE V SIZE	
	BV LIN		BLUE V LINEARITY	
	BV MSIZ		BLUE V MID SIZE	
	BV MKEY		BLUE V MID KEY	
	BV KEY		BLUE V KEY	
	BV SSKW		BLUE V SUB SKEW	
	BV MPIN		BLUE V MID PIN	
	BV PIN		BLUE V PIN	

Category	Adjustment item	Standard data	Note	Device
RG	BV SBOW		BLUE V SUB BOW	
	BV WAVE		BLUE V WAVE	
	BV 4PIN		BLUE V 4TH PIN	
	BV WING		BLUE V WING	

CC

Category	Adjustment item	Standard data	Note	Device
CC	CRIH	9	CRI COUNT HIGH	
	CRIL	2	CRI COUNT LOW	
	CR2L	2	CRI COUNT LOW(F2)	
	CCDI	3	NO CCD INT COMPARE	
	CRIP	7	CRI & PARITY ERROR	
	CRIT	0	CRI TIME CONSTANT	
	CSB1	2	SYNC SLICE BIAS 1	
	CSB2	5	SYNC SLICE BIAS 2	
	CCBD	4	C SYNC BACKPORCH DET	
	CCFD	7	C SYNC FRONTPORCH DET	
	CREP	136	CRI SIGNAL END POSITION	
	CSEP	176	START BIT END POSITION	
	CRBD	8	CRI BACKPORCH DET	
	CRFD	9	CRI FRONTPORCH DET	
	CSSD	3	STROBE WINDOW ST DLY	
	CSED	9	STROBE WINDOW ED DLY	
	CSBS	12	START BIT THRESHOLD	
	CDSD	8	DATA START DELAY	
	CCDS	9	CAPTION DT THRESHOLD	
	CHMK	38	H SYNC MASK WIDTH	
	CHSY	144	H SYNC VCO COUNT	

OP

Category	Adjustment item	Standard data	Note	Device
OP	DISP		OSD POSITION	

ID

Category	Adjustment item	Standard data		Note	Device
		S	46C		
ID	ID0	25	25	MODEL ID#0	
	ID1	21	55	MODEL ID#1	
	ID2	31	31	MODEL ID#2	
	ID3	00	00	MODEL ID#3	
	ID4	155	155	MODEL ID#4	
	ID5	177	177	MODEL ID#5	
	ID6	198	198	MODEL ID#6	
	ID7	66	66	MODEL ID#7	

PP

Category	Adjustment item	Standard data	Note	Device
PP	BGHP	-	PIP H POSITION	
	BGVP	-	PIP V POSITION	
	MAHP	-	P&P MAIN H AQUISITION	
	MAVP	-	P&P MAIN V AQUISITION	
	SAHP	-	P&P SUB H AQUISITION	
	SAVP	-	P&P SUB V AQUISITION	
	DECS	-	S DECODER REGISTERS	
	DECM	-	M DECODER REGISTERS	
	DIS	-	DISPLAY SETTING	
	BHSZ	-	BORDER H SIZE	
	BVSZ	-	BORDER V SIZE	
	VPED	-	V OFFSET	
	UPED	-	U OFFSET	

PS

Category	Adjustment item	Standard data	Note	Device
PS	PIPH		PIP H POSITION	
	PIPV		PIP V POSITION	
	PMVD	16	PIP V PULSE DELAY(M)	
	PIVD	22	PIP V PULSE DELAY(I)	
	PCON		PIP CONTRAST(I)	
	FRMY	7	PIP FRAME Y LEVEL	
	IPER	0	PIP PEDESTAL R-Y(I)	
	IPEB	0	PIP PEDESTAL B-Y(I)	
	IHUE		PIP SUB HUE	
	ICOL		PIP SUB COLOR	
	PHDL	3	PIP H PULSE DELAY	
	PYSD	0	PIP SELECT DELAY	
	PYDL	0	PIP Y DELAY	
	PCPS	0	PIP CLP	
	PCPF	0	PIP CLP CYCLES	
	PSEL	0	PIP SELDOWN	

Category	Adjustment item	Standard data	Note	Device
PS	PPLL	0	PIP PLL	
	CHRI	1	PIP INPUT POLARITY	
	CHRO	0	PIP OUTPUT POLARITY	

MC

Category	Adjustment item	Standard data	Note	Device
MC	MSCN	-	P&P MAIN SUB CONTRAST	
	MSHU	-	P&P MAIN SUB HUE	
	MSCL	-	P&P MAIN SUB COLOR	
	MUPD	-	P&P MAIN U OFFSET	
	MVPD	-	P&P MAIN V OFFSET	
	MDLY	-	P&P MAIN Y DELAY	
	MBGR	-	P&P MAIN SCP CONTROL(1)	
	MBGF	-	P&P MAIN SCP CONTROL(2)	

IC

Category	Adjustment item	Standard data	Note	Device
IC	SSCN	-	P&P SUB SUB CONTRAST	
	SSHU	-	P&P SUB SUB HUE	
	SSCL	-	P&P SUB SUB COLOR	
	SUPD	-	P&P SUB U OFFSET	
	SVPD	-	P&P SUB V OFFSET	
	SDLY	-	P&P SUB Y DELAY	
	SBGR	-	P&P SUB SCP CONTROL(1)	
	SBGF	-	P&P SUB SCP CONTROL(2)	
	PAFC	-	PIP AFC LOOP GAIN	
	PTOT	-	PIP CHROMA TOT FILTER	
	PYDR	-	PIP Y DRIVE	
	PYDC	-	PIP DC TRAN	
	PSHP	-	PIP SHARPNESS F0	
	PDPI	-	PIP DYNAMIC PICTURE	
	PSYS	-	PIP COLOR SYSTEM	
	PXTL	-	PIP X' TAL	
	PLOP	-	PIP COLOR LOOP	

ADJUSTMENT ITEM AND PROCEDURE	EQUIPMENT AND SIGNAL	MEASUREMENT POSITION	ADJUSTMENT LOCATION	ILLUSTRATION AND SHAPE AND NUMBER
CONVERGENCE ADJUSTMENT ●When replacing the deflection yoke, always perform "DEFLECTION YOKE TILT ADJUSTMENT" before adjusting the convergence. Adjustment procedure VP MAIN → RG GH (SUB), RG GV (SUB) → RG RH(SUB), RG RV (SUB) → RG BH (SUB), RG BV (SUB)				
• GREEN REGISTRATION ADJUSTMENT			<VP MENU>	
• V-SHIFT adjustment	Monoscope pattern or Crosshatch pattern		VP VPOS	VPOS
• V-LINEARITY adjustment			VP VSIZ	VSIZ
• V-SIZE, V-CORRECTION adjustment While tracking, adjust so that the lattice intervals for VSIZ and VSCO are equal.			VP VLIN VP VSCO	VLIN VSCO

ADJUSTMENT ITEM AND PROCEDURE	EQUIPMENT AND SIGNAL	MEASUREMENT POSITION	ADJUSTMENT LOCATION	ILLUSTRATION AND SHAPE AND NUMBER
• H-SHIFT adjustment			VP HPOS	HPOS 
• H-SIZE adjustment Finely adjust with SUB MSIZ.			VP HSIZ	HSIZ 
• PIN-AMP adjustment Finely adjust with SUB MPIN.			VP PAMP	PAMP 
• UPPER/LOWER-CORNER PIN adjustment Correct the screens top and bottom bow line. However, if this adjustment is overdone, distortion may occur with the PIN-AMP adjustment that can not be re-adjusted. Note : The PIN-AMP adjusts the overall screen from top to bottom, but the UPPER/LOWER-CORNER PIN adjustments have large movement in the top and bottom sections, so be careful.			VP UPIN VP LPIN	UPIN  LPIN 
• V-BOW, V-ANGLE adjustment Correct the tilt and bow of the vertical line at the center of the screen.			VP VBOW VP VANG	VBOW  VANG 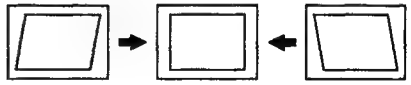

ADJUSTMENT ITEM AND PROCEDURE	EQUIPMENT AND SIGNAL	MEASUREMENT POSITION	ADJUSTMENT LOCATION	ILLUSTRATION AND SHAPE AND NUMBER
• GREEN SUB ADJUSTMENT **SCREEN CENTER SECTION GREEN VERTICAL LINE ADJUSTMENT** 1. Finely adjust with GH CENT, GH BOW, GH SKEW. Adjust by watching out for the RGH CENT screen center section.			<RG-GH MENU> GH CENT GH SKEW GH BOW	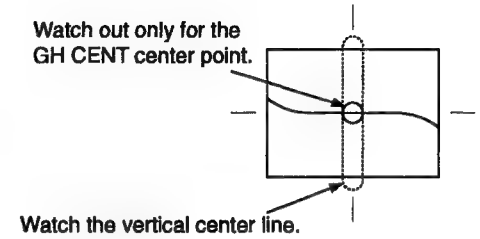 GH CENT  GH SKEW  GH BOW 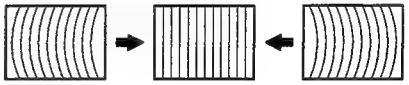
2. GH 4TH BOW adjustment Correct the corner distortion that could not be adjusted away with the GH BOW adjustment.			GH 4BOW	GH 4BOW 

ADJUSTMENT ITEM AND PROCEDURE	EQUIPMENT AND SIGNAL	MEASUREMENT POSITION	ADJUSTMENT LOCATION	ILLUSTRATION AND SHAPE AND NUMBER
SCREEN CENTER SECTION GREEN HORIZONTAL LINE ADJUSTMENT 1. Finely adjust the center position of the vertical line at the center of the screen with GV CENT.			<RG-GV MENU> GV CENT	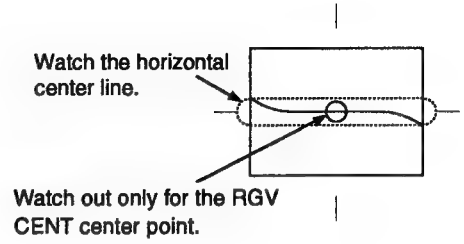 GV CENT 
2. Correct the tilt and bow of the horizontal line at the center of the screen with GV SKEW and GV BOW.			GV SKEW GV BOW	GV SKEW  GV BOW 
GREEN SIZE AND LINEARITY ADJUSTMENT 1. Balance the sizes at both sides of the center section of the screen with GH MLIN. 2. Balance the sizes on both end sections of the screen with GH LIN. 3. While tracking, adjust with GH MLIN and GH LIN so that the sizes of the horizontal line at the center of the screen are symmetrical left and right.			<RG-RH MENU> GH MLIN GH LIN	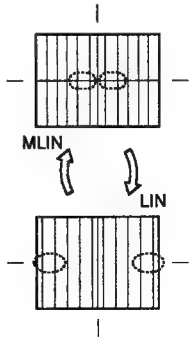

ADJUSTMENT ITEM AND PROCEDURE	EQUIPMENT AND SIGNAL	MEASUREMENT POSITION	ADJUSTMENT LOCATION	ILLUSTRATION AND SHAPE AND NUMBER
GREEN HORIZONTAL SIZE ADJUSTMENT 1. Adjust with GH MSIZE so that the sizes of both ends and of both sides of the center section of the screen are equal. 2. Adjust with GH SIZE so that the horizontal sizes of both ends and of both sides of the center section of the screen are equal. 3. While tracking, adjust with GH MSIZ and GH SIZE so that the lattice intervals for the horizontal line section of the center section of the screen are equal and so that the horizontal size is the prescribed value. 4. If M LIN is changed when the GH MSIZ and GH SIZE adjustment is complete, adjust again while tracking. ●With just the H SIZE adjustment in MAIN, if there is no need to adjust GH SIZE in SUB this can save power.			<RG-GH MENU> GH MSIZ GH SIZE	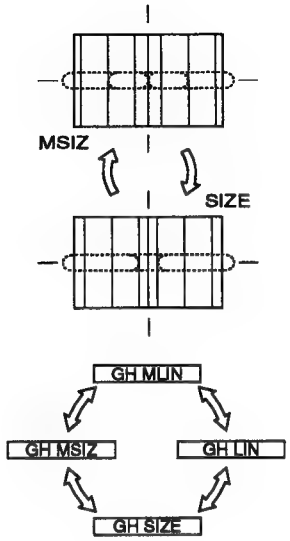
GREEN VERTICAL LINEARITY ADJUSTMENT 1. Adjust GV LIN so that the vertical lines at the top and bottom of the screen are symmetrical.			<RG-GV MENU> GV LIN	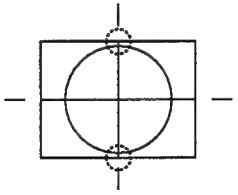

ADJUSTMENT ITEM AND PROCEDURE	EQUIPMENT AND SIGNAL	MEASUREMENT POSITION	ADJUSTMENT LOCATION	ILLUSTRATION AND SHAPE AND NUMBER
GREEN VERTICAL SIZE ADJUSTMENT 1. Adjust with GV MSIZE so that the sizes for the top and bottom sections of the screen and for both sides of the center section of the screen are equal. 2. Set the vertical size to the prescribed value with GV SIZE. 3. Adjust GV MSIZ and GV SIZE watching the vertical line at the center section of the screen. 4. While tracking, adjust with GV MSIZ and GV SIZE so that the lattice intervals for the vertical line section of the center section of the screen are equal and so that the vertical size is the regulation value. 5. If GV LIN is out of place when the GV MSIZ and GV SIZE adjustment is complete, adjust again while tracking. ●If there is no need to adjust GV SIZE in SUB with just the V SIZE adjustment in MAIN, this can save power.			<RG-GV MENU> GV MSIZ GV SIZE	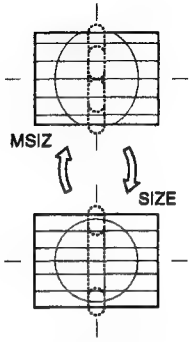 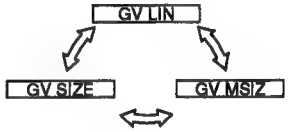
GREEN HORIZONTAL TRAPEZOIDAL DISTORTION ADJUSTMENT 1. Adjust with GH SSKW so that the tilt of the vertical lines at both ends of the screen is symmetrical left and right. 2. Adjust with GH KEY so that there is no tilt in the vertical lines at both ends of the screen. 3. If there is a tilt on either the left or right after the GH KEY adjustment, adjust while tracking.			<RG-GH MENU> GH SSKW GH KEY	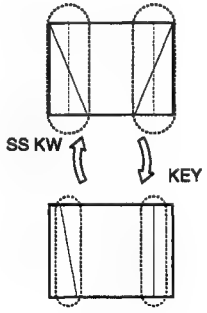

ADJUSTMENT ITEM AND PROCEDURE	EQUIPMENT AND SIGNAL	MEASUREMENT POSITION	ADJUSTMENT LOCATION	ILLUSTRATION AND SHAPE AND NUMBER
GREEN HORIZONTAL QUATERNARY ADJUSTMENT 1. Correct the quaternary distortion with GH 4PIN. 2. While balancing, correct the quaternary distortion of both end sections of the screen with GH 4SBO. 3. While tracking, adjust with GH 4PIN and GH 4SBO.			<RG-GH MENU> GH 4PIN GH 4BOW	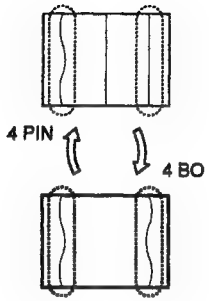
GREEN HORIZONTAL ASYMMETRICAL PIN DISTORTION ADJUSTMENT 1. Adjust with GH MBOW so that the pin asymmetry at both sides of the center section of screen is symmetrical. 2. Adjust with GH SBOW so that the bow at both end sections of the screen is symmetrical left and right. 3. While tracking, adjust with GH MBOW and GH SBOW so that the bow of vertical lines on the entire screen is symmetrical left and right.			<RG-GH MENU> GH MBOW GH SBOW	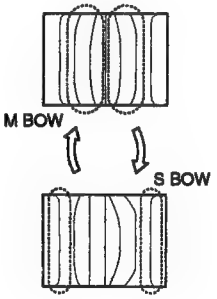

ADJUSTMENT ITEM AND PROCEDURE	EQUIPMENT AND SIGNAL	MEASUREMENT POSITION	ADJUSTMENT LOCATION	ILLUSTRATION AND SHAPE AND NUMBER
GREEN HORIZONTAL SYMMETRICAL PIN DISTORTION ADJUSTMENT 1. Adjust the pin distortion at both sides of the center section of the screen with GH MPIN. 2. Adjust the pin distortion at both end sections of the screen with GH PIN. 3. While tracking, adjust with GH MPIN and GH PIN so that the PIN of vertical lines on the entire screen have no bowing. 4. If there is asymmetrical pin distortion after the GH MPIN and GH PIN adjustments, adjust with GH MBOW and GH SBOW while tracking. ●With just the PIN AMP adjustment in MAIN, if there is no need to adjust GV PIN in SUB, this can save power.			<RG-GH MENU> GH MPIN GH PIN GH MBOW GH SBOW	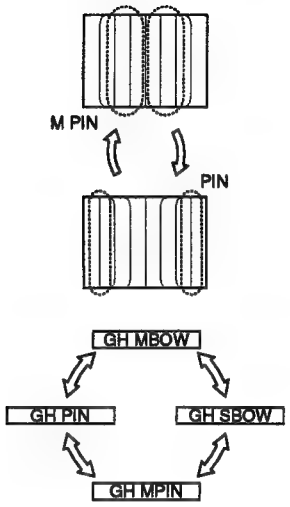
GREEN VERTICAL WAVE (TERTIARY DISTORTION) ADJUSTMENT 1. Take the screen top and bottom horizontal lines with GV WAVW and find the secondary and quaternary waveform. 2. There is KEY distortion after the GV WAVW adjustment, so adjust with GV WAVW and GV KEY while tracking.			<RG-GV MENU> GV WAVE GV KEY	GV WAVE 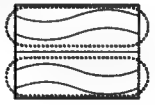 GV KEY  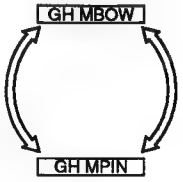

ADJUSTMENT ITEM AND PROCEDURE	EQUIPMENT AND SIGNAL	MEASUREMENT POSITION	ADJUSTMENT LOCATION	ILLUSTRATION AND SHAPE AND NUMBER
GREEN VERTICAL QUATERNARY DISTORTION ADJUSTMENT 1. Correct the quaternary distortion of the horizontal lines at the top and bottom sections of the screen with RGV 4PIN. 1) Since there is no 4SBOW for vertical correction, there will be a slight imbalance, but adjust to eliminate the distortion from the horizontal line at either the top or the bottom of the screen. 2) In many cases, the horizontal lines at the top and bottom sections of the screen are not straight lines after the adjustment. As long as the secondary distortion is mild enough that it can be corrected with the PIN adjustment, this is OK.			<RG-GV MENU> GV 4PIN	GV 4PIN 
GREEN VERTICAL TRAPEZOIDAL DISTORTION ADJUSTMENT 1. Adjust with GV SSKW so that the tilt of the horizontal lines at the top and bottom sections of the screen is symmetrical about the center position horizontal line. 2. Adjust with GV MKEY so that there is no tilt for the line sections at both sides of the horizontal lines at the center section of the stream. 3. Adjust with GV KEY so that there is no tilt for the horizontal lines at the top and bottom sections of the screen. 4. While tracking, adjust with GV MKEY and GV KEY so that there is no tilt for the horizontal lines on the entire screen. 5. If the tilt is unbalanced after the GV MKEY and GV KEY adjustment, adjust again with GV SSKW.			<RG-GV MENU> GV SSKW GV MKEY GV KEY GV SSKW	GV SSKW  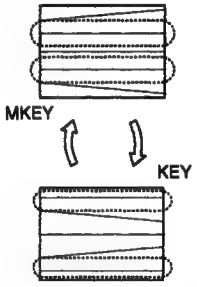 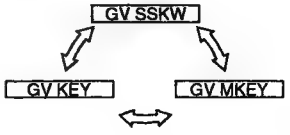

ADJUSTMENT ITEM AND PROCEDURE	EQUIPMENT AND SIGNAL	MEASUREMENT POSITION	ADJUSTMENT LOCATION	ILLUSTRATION AND SHAPE AND NUMBER
GREEN VERTICAL ASYMMETRICAL PIN DISTORTION (SECONDARY DISTORTION) ADJUSTMENT 1. Correct the asymmetrical pin distortion at the top and bottom sections of the screen with GV SBOW.			<RG-GV MENU> GV SBOW	RGV SBOW 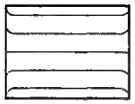
GREEN VERTICAL ASYMMETRICAL PIN DISTORTION ADJUSTMENT 1. Adjust the pin distortion for both side sections and the center of the screen with GV MPIN. 2. Adjust with GV PIN so that the horizontal lines at the top and bottom sections of the screen are straight lines. 3. Adjust with GV MPIN and GV PIN so that there is no curve in the horizontal lines on the entire screen.			<RG-GV MENU> GV MPIN GV PIN	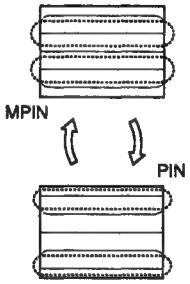
4. After the adjustments in Items 1-3, adjust the tracking with GV SBOW, GV MPIN, and GV PIN.			GV SBOW	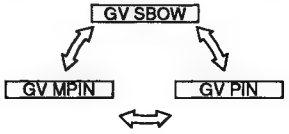

ADJUSTMENT ITEM AND PROCEDURE	EQUIPMENT AND SIGNAL	MEASUREMENT POSITION	ADJUSTMENT LOCATION	ILLUSTRATION AND SHAPE AND NUMBER
GREEN AND RED REGISTRATION ADJUSTMENT (RRH, RRV) 1. Receive a cross-hatch signal. 2. Adjust so that the red lines lay on the green lines. Adjust with the same procedure as the GREEN SUBadjustment. Notes : 1. The main correction is not carried out during red registration adjustment. 2. Beware. The green adjustment items can be changed by mistake. 3. Unlike for green, adjust within the range -127 ~ +128.	Cross-hatch pattern			
GREEN AND BLUE REGISTRATION ADJUSTMENT (RBH, RBV) 1. Receive a cross-hatch signal. 2. Adjust so that the blue and green lines are on top of each other. Notes : 1. The main correction is not carried out during RED registration adjustment. 2. Beware. The GREEN and RED adjustment items can be changed by mistake.	Cross-hatch pattern			

ADJUSTMENT ITEM AND PROCEDURE	EQUIPMENT AND SIGNAL	MEASUREMENT POSITION	ADJUSTMENT LOCATION	ILLUSTRATION AND SHAPE AND NUMBER
AGC ADJUSTMENT				
1. Receive an off-air signal.				
2. Adjust the AGC VR (TU 1001) so that there is no snow noise and cross-modulation.				
WHITE BALANCE ADJUSTMENT				
1. Receive the monoscope pattern signal and adjust the picture quality with the menu.	Monoscope pattern		PICTURE .....minimun	
2. Adjust service mode SBRT so that the signal 10 IRE section barely glows.			<RGB MENU> RGB SBRT	
3. Receive the all-white pattern signal.	All White pattern		RGB GCUT	
4. Adjust the white balance with service mode GCUT and BCUT.			RGB BCUT	
5. Adjust service mode SBRT so that the signal 100 IRE section barely glows.			PICTURE .....minimun	
6. Adjust the white balance with service mode GDRV and BDRV.			RGB GDRV	
7. Repeatedly adjust the white balance for the minimum and maximum picture settings.			RGB BDRV PICTURE .....maximum	

SECTION 4
SAFETY RELATED ADJUSTMENTS

ADJUSTMENT ITEM AND PROCEDURE	EQUIPMENT AND SIGNAL	MEASUREMENT POSITION	ADJUSTMENT LOCATION	ILLUSTRATION AND SHAPE AND NUMBER
[G BOARD] **HV REGULATION CIRCUIT CHECK AND ADJUSTMENT** When replacing the following components marked with ◪ on the schematic diagram always check HV regulation, and if necessary re-adjust. **OPERATION CHECK** 1. Connect a HV static voltmeter to the unconnected plug of the high-voltage block. 2. Power on the set. 3. Receive dot signal pattern. (PICTURE and BRIGHT to minimum) 4. Check that the HV static voltmeter is reading 31.00±1.0kVdc. **HV Regulation adjustment** 1. Connect a HV static voltmeter to the unconnected plug of the high-voltage block. 2. Power on the set. 3. Receive dot signal pattern. (PICTURE and BRIGHT to minimum) 4. If anode voltage is 32kV or higher, replace C514 of 390PF/2kV with that of 680PF/2kV, and check if the voltage is within the standard range. 5. If anode voltage is 30kV or lower, replace C514 of 390PF/2kV with that of 100PF/2kV, and check if the voltage is within the standard range.		◪ marked parts C514, C516, C515, T502 (PMT), T503 (HLT), T504 (FBT), DEFLECTION YOKE, IC651	☒ C514	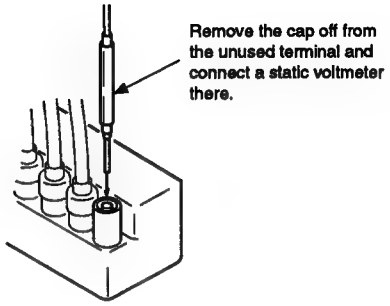 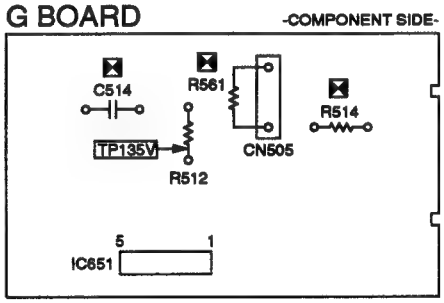

ADJUSTMENT ITEM AND PROCEDURE	EQUIPMENT AND SIGNAL	MEASUREMENT POSITION	ADJUSTMENT LOCATION	ILLUSTRATION AND SHAPE AND NUMBER
[G BOARD] **HV HOLD DOWN CIRCUIT OPERATION CHECK AND ADJUSTMENT (⧓ R514, R561)** When replacing the following components marked with ◪ on the schematic diagram, always check hold-down voltage and if necessary re-adjust. **OPERATION CHECK** 1. Remove CN651 connecter. 2. Short-circuit across TP-PROT (R692) and ground. 3. Connect a HV static voltmeter to the unconnected plug of the high-voltage block. 4. Connect a 220k variable resistor, across pin ③ and pin ⑤ of IC651 set to maximum value. 5. Power on the set. 6. Receive dot signal pattern. (PICTURE and BRIGHT to minimum) 7. Gradually lower the value of the variable resistor and check that the hold-down circuit operates at a static voltmeter reading of 33.5±1.0kVdc when the raster disappears. **HV HOLD-DOWN ADJUSTMENT** 1. Repeat steps ① ~ ⑦ as above. 2. If hold down voltage is 34.5kV or higher, remove R514, mount a resistor (390kΩ, 1/4W : RN) onto R561 instead, and check again if the hold-down voltage is within the standard range. 3. If hold-down voltage is 32.5kV or lower, mount a resistor (220kΩ, 1/4W : RN) onto R561, and check again if the hold-down voltage is within the standard range. **NOTE :** Please finish the adjustment as soon as possible.		◪ marked parts R502, R514, R516, R517, R539, R560, R561, C507, C513, D501, D504, D507, IC301, IC501, IC651, T502 (PMT), T503 (HLT), T504(FBT) DEFLECTION YOKE	⧓ R514, 561	G BOARD -COMPONENT SIDE- 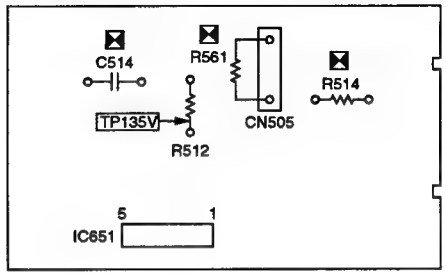

ADJUSTMENT ITEM AND PROCEDURE	EQUIPMENT AND SIGNAL	MEASUREMENT POSITION	ADJUSTMENT LOCATION	ILLUSTRATION AND SHAPE AND NUMBER
[G BOARD] **+B MAX VOLTAGE CONFIRMATION** The following adjustments should always be performed when replacing IC651. 1. Supply 130VAC to variable autotransformer. 2. Input dot signal. 3. Set the PICTURE control and the BRIGHTNESS controls to minimum. 4. Confirm if the voltage of G BOARD TP135V is less than 137.0 Vdc. 5. If step 4 is not satisfied, replace IC651 and repeat above steps. **+B OVP CONFIRMATION** 1. Remove CN651 connector. 2. Connect a voltmeter to TP135V, and TP (PROT) and ground. 3. Connect a 220kΩ variable resistor, across pin ③ and pin ⑤ of IC651, and set to maximum value. 4. Supply 120VAC to variable autotransformer. 5. Set PICTURE and the BRIGHTNESS controls to minimum. 6. Gradually turn the 220kΩ variable register, and check if OVP works properly when the voltage of TP135V is between 139.0~151.5V.				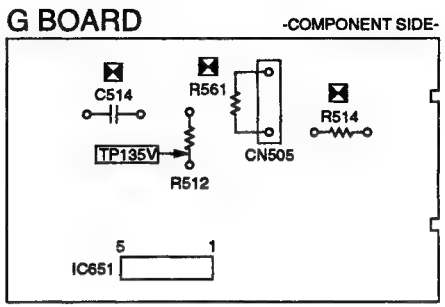

SECTION 5
CIRCUIT ADJUSTMENT

ADJUSTMENT ITEM AND PROCEDURE	EQUIPMENT AND SIGNAL	MEASUREMENT POSITION	ADJUSTMENT LOCATION	ILLUSTRATION AND SHAPE AND NUMBER
RF AGC 1. Input a color-bar signal. 2. Adjust AGC VR of TU1101 so that snow, noise, and cross-modulation disapper from the picture. 3. Verify picture quality on each channel.				
BER DISPLAY ADJUSTMENT (DISP) 1. Receive cross-hatch signal. 2. Set to Service mode. 3. Select "DISP", and adjust so that the blank spaces on the both sides of picture bar become equal. 4. Write the data into memory. MUTING→ENTER				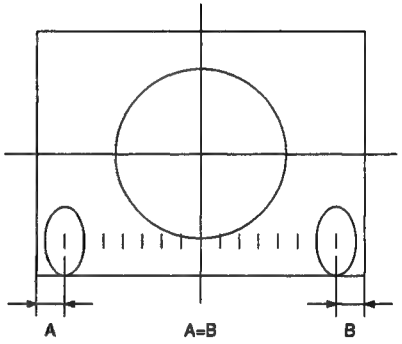
SUB-CONTRAST ADJUSTMENT (SCON) 1. Receive the color-bar signal. 2. PICTURE : maximum COLOR : minimum BRIGHTNESS : minimum RON---1 GON---0 BON---0 3. Set to service mode. 4. Connect an oscilloscope between ⑥ pin of CN004 (A Board) and ground. 5. Select "SCON" and adjust so that the wave from level is 1.50±0.1Vp-p. 6. Write the data into memory MUTING→ENTER				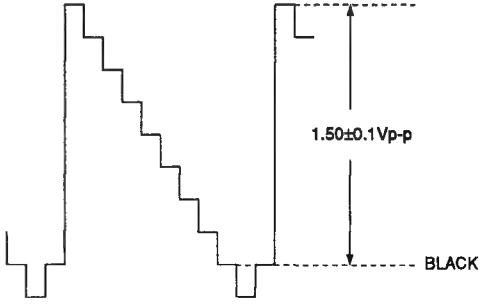

ADJUSTMENT ITEM AND PROCEDURE	EQUIPMENT AND SIGNAL	MEASUREMENT POSITION	ADJUSTMENT LOCATION	ILLUSTRATION AND SHAPE AND NUMBER
SUB-HUE AND SUB-COLOR ADJUSTMENT (SHUE, SCOL) 1. Receive color-ber signal. 2. PICTURE : maximum COLOR : minimum BRIGHTNESS : minimum 3. Set to Service mode. 4. Connect an oscilloscope between ⑦ pin of CN004 (A Board) connecter and ground. 5. Select "SHUE" and "SCOL", and adjust them to have VB1=VB4 and VB2=VB3 in the waveform levels. 6. Raise SCOL data 1 steps higher. 7. Write the data into memory. MUTING → ENTER				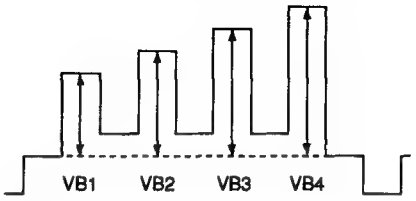

ADJUSTMENT ITEM AND PROCEDURE	EQUIPMENT AND SIGNAL	MEASUREMENT POSITION	ADJUSTMENT LOCATION	ILLUSTRATION AND SHAPE AND NUMBER
P IN P POSITION ADJUSTMENT (PIPH, PIPV) 1. Receive monoscope pattern signal. 2. Set to P IN P mode, and to Service mode. 3. Check the SUB PICTURE position. 4. Select "PIPH" and "PIPV" and adjust H/V position to the specified level. 5. Write the data into memory MUTING → ENTER				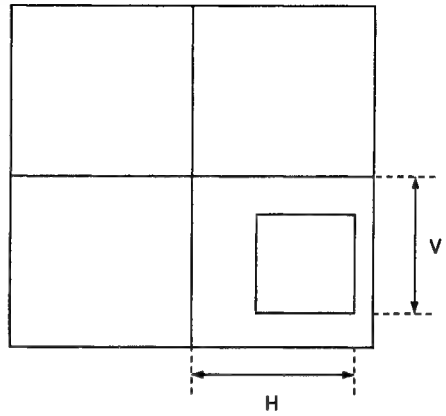 H : 7.00 ± 0.25sq V : 5.25 ± 0.25sq
P IN P SUB CONTRAST ADJUSTMENT (PCON) 1. Receive color-bar signal. 2. PICTURE : maximum COLOR : minimum BRIGHTNESS : minimum 3. Set to Service mode. 4. Connect an oscilloscope between ⑨ pin CN303 (A Board) and ground. 5. Select "P CON" and adjust so that waveform level is $1.4^{+0.00}_{-0.05}$ Vp-p. 6. Write the data into memory. MUTING → ENTER				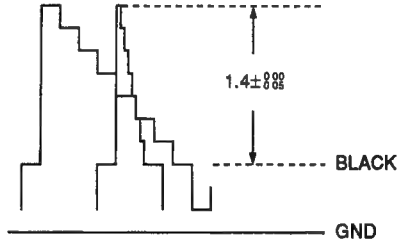

ADJUSTMENT ITEM AND PROCEDURE	EQUIPMENT AND SIGNAL	MEASUREMENT POSITION	ADJUSTMENT LOCATION	ILLUSTRATION AND SHAPE AND NUMBER
P IN P SUB HUE, SUB COLOR ADJUSTMENT (IHUE, ICOL) 1. Receive the color-bar signal. 2. PICTURE : maximum COLOR : center BRIGHTNESS : center 3. Set to Service mode. 4. Connect an oscilloscope between ⑤ pin of CN303 (A Board) and ground. 5. Select "IHUE" and ICOL, adjust them to have VB1=VB4 and VB2=VB3 in the waveform levels. 6. Raise "ICOL" data 1 steps higher. 7. Write the data into memory. MUTING→ENTER				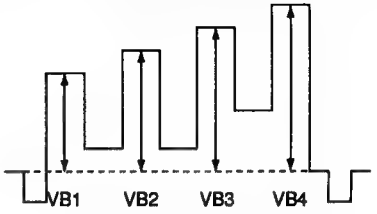

SECTION 6
DIAGRAMS

6-1. BLOCK DIAGRAMS (1)

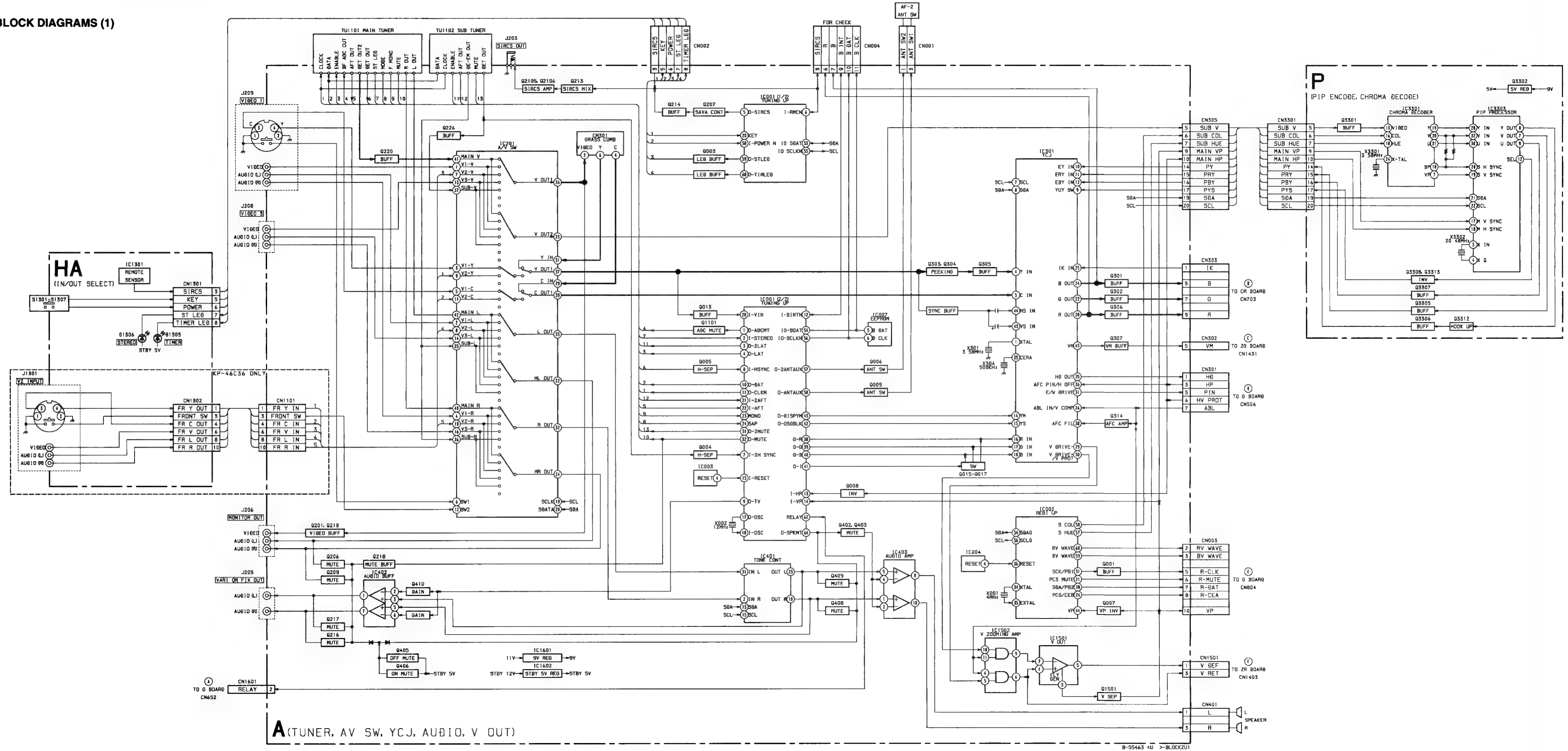

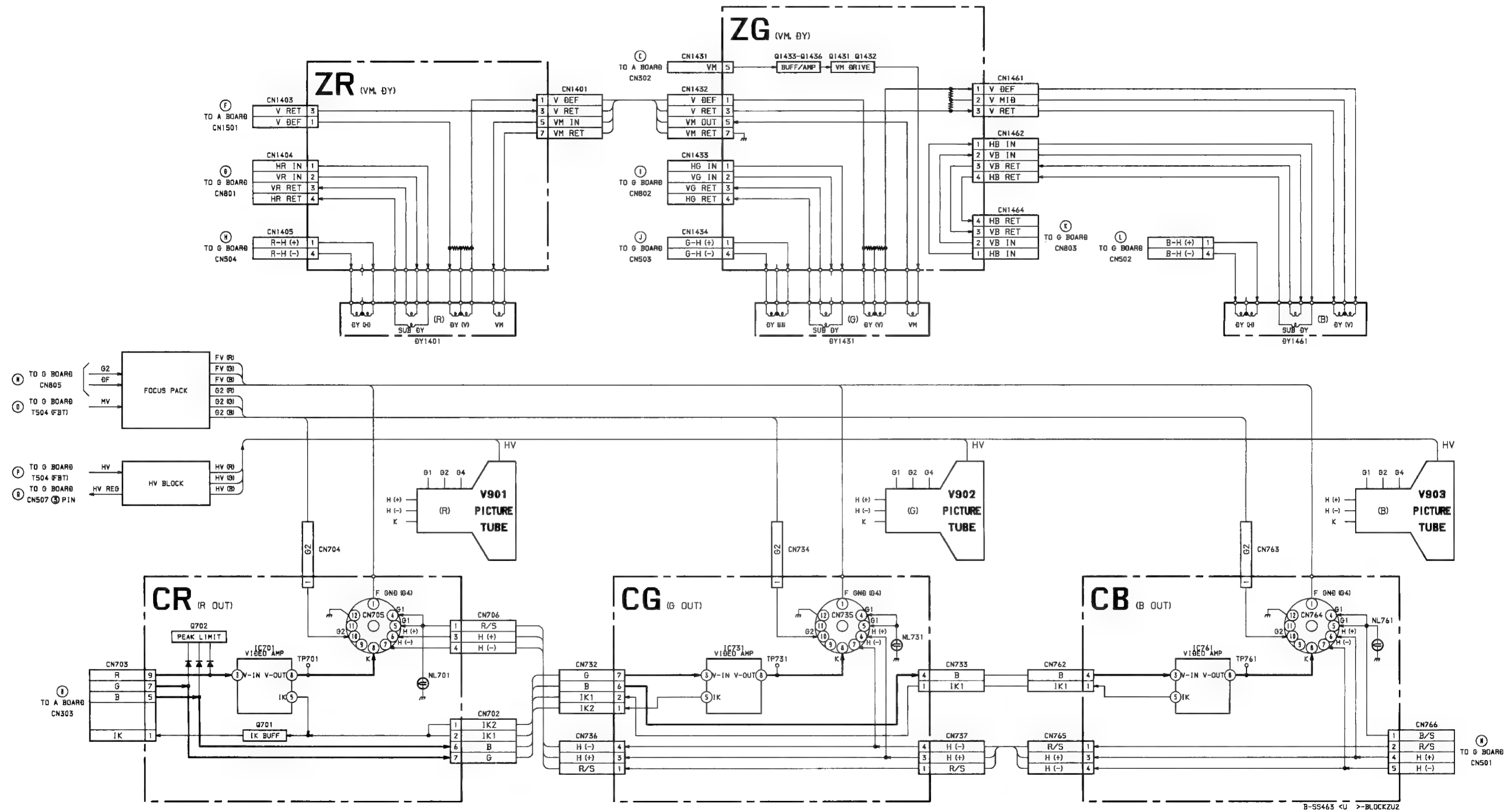
ZR (VM, DY)
ZG (VM, DY)
CR (R OUT)
CG (G OUT)
CB (B OUT)
FOCUS PACK
HV BLOCK
V901 PICTURE TUBE
V902 PICTURE TUBE
V903 PICTURE TUBE
TO A BOARD CN1501
TO G BOARD CN801
TO G BOARD CN504
TO A BOARD CN302
TO G BOARD CN802
TO G BOARD CN503
TO G BOARD CN803
TO G BOARD CN502
TO G BOARD CN805
TO G BOARD T504 (FBT)
TO G BOARD CN507 ③ PIN
TO A BOARD CN303
TO G BOARD CN501
B-SS463 <U >-BLOCKZU2

BLOCK DIAGRAMS (3)

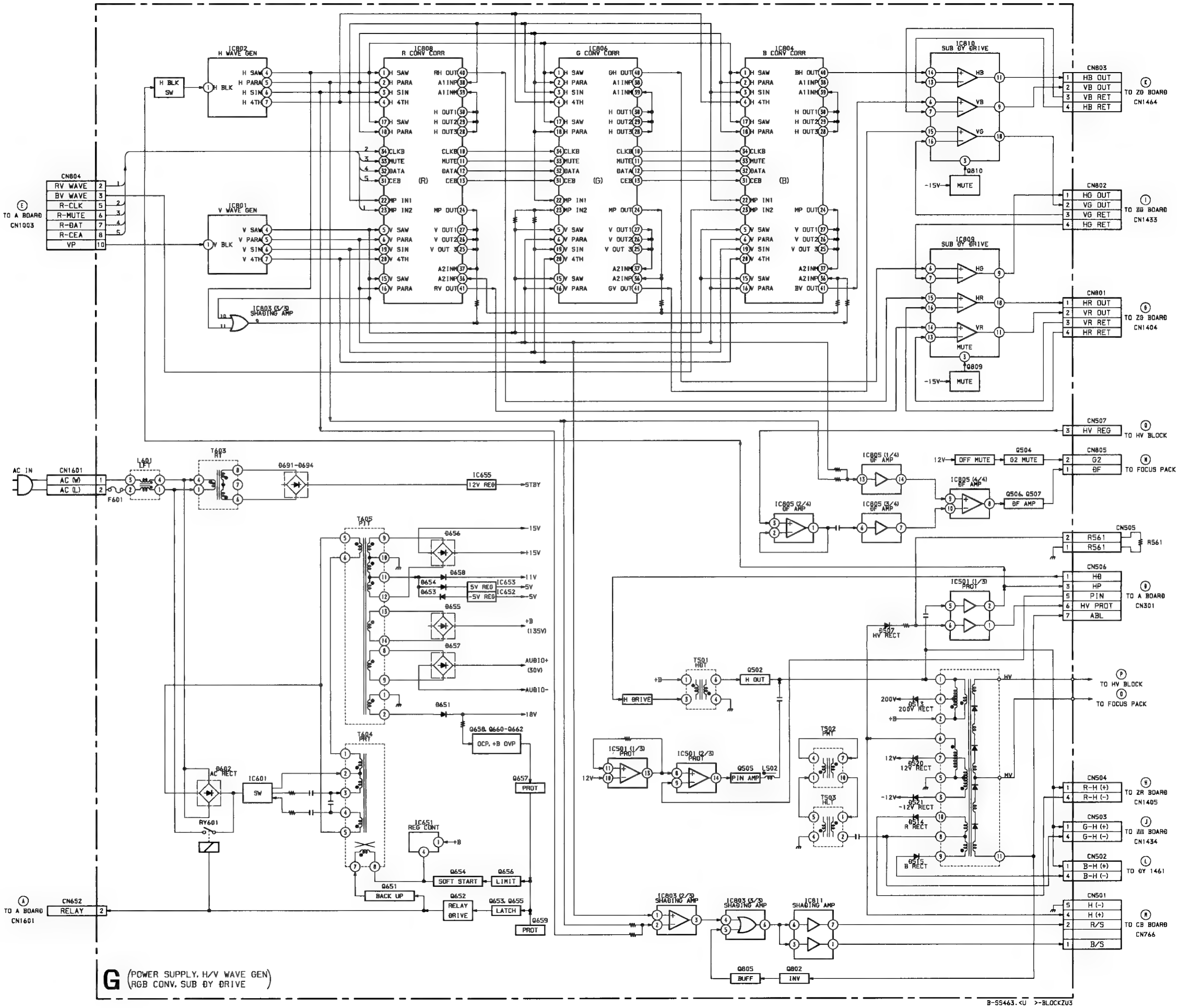

6-2. FRAME SCHEMATIC DIAGRAM

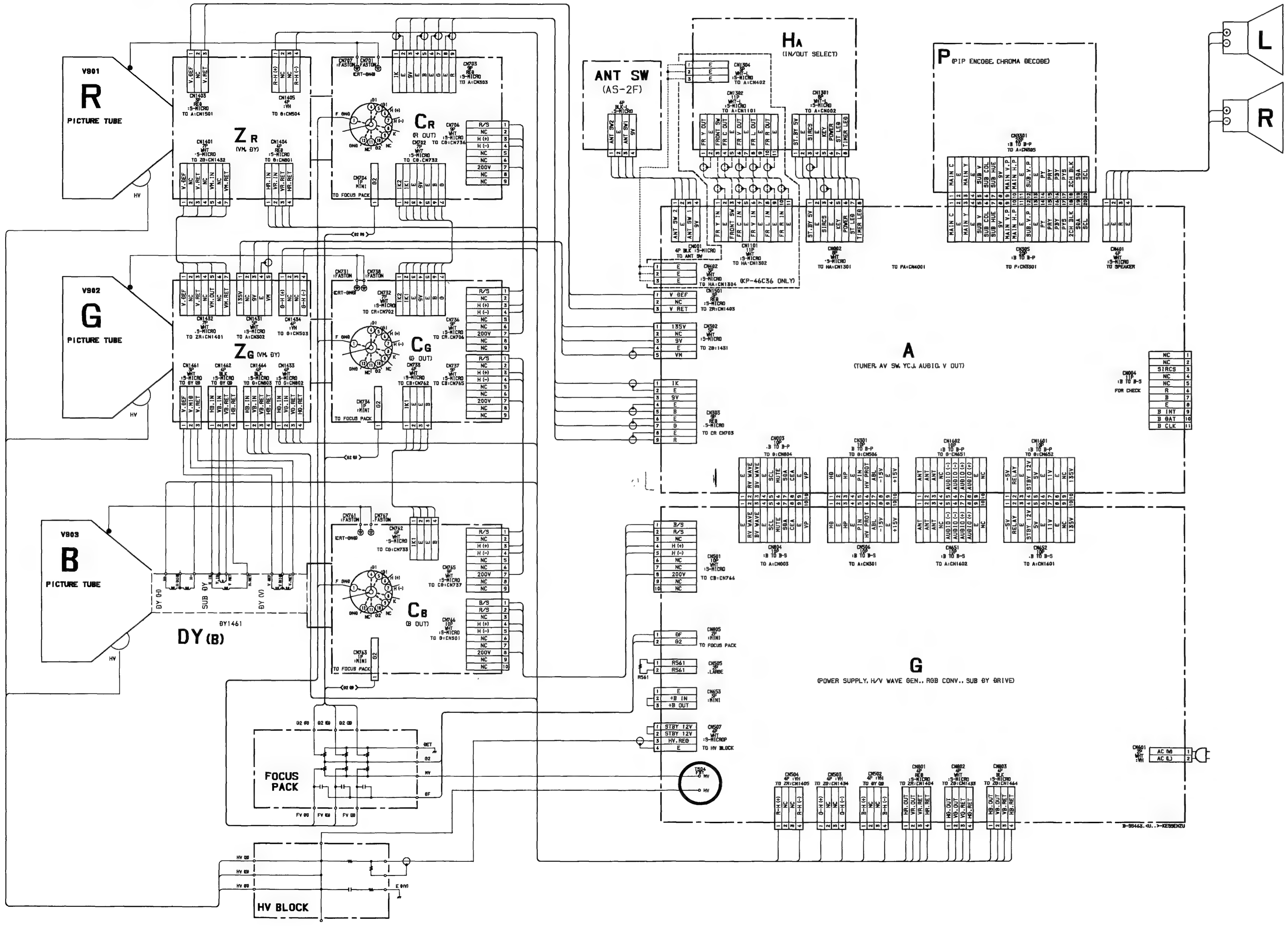

6-3. CIRCUIT BOARDS LOCATION

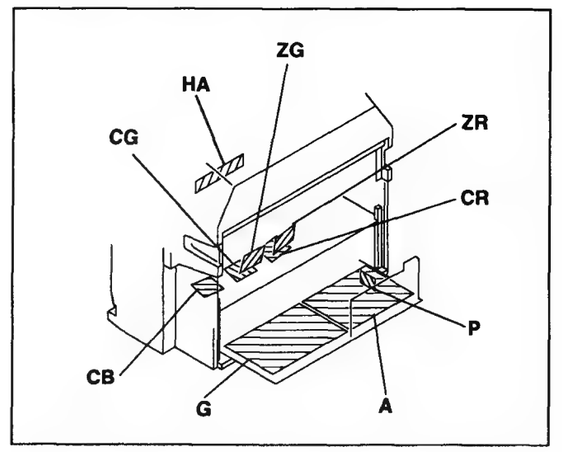

6-4. PRINTED WIRING BOARDS AND SCHEMATIC DIAGRAMS

Note:

- All capacitors are in μF unless otherwise noted. pF: μμF 50WV or less are not indicated except for electrolytics and tantalums.
- All resistors are in ohms.
  kΩ = 1000Ω, MΩ = 1000kΩ
- Indication of resistance, which does not have one for rating electrical power, is as follows

Pitch: 5 mm
Rating electrical power: 1/4W

- : nonflammable resistor
- : fusible resistor.
- : internal component.
- : panel designation and adjustment for repair.
- All variable and adjustable resistors have characteristic curve B, unless otherwise noted.
- : earth-chassis.
- The components identified by ⊠ in this basic schematic diagram have been carefully factory-selected for each set in order to satisfy regulations regarding X-ray radiation.
  Should replacement be required, replace only with the value originally used.
- When replacing components identified by ◪, make the necessary adjustments indicated. If results do not meet the specified value, change the component identified by ⊠ and repeat the adjustment until the specified value is achieved.
  (Refer to R514, R561 and C514 adjustment on Page 49 to 51)
- When replacing the part in below table, be sure to perform the related adjustment.

Part replaced (◪)	Adjustment (⊠)
C514, C515, C516, IC651, T502, T503, T504, DY	HV Regulator (C514)
C507, C513, D501, D504, D507, IC301, IC501, IC651, R502, R514, R516, R517, R539, R560, R561, T502, T503, T504, DY	HV HOLD-DOWN (R514, R561)

- As to the voltage value shown by the semiconductors on the Schematic Diagram, see the another list.
- Readings are taken with a color-bar signal input.
- Readings are taken with a 10MΩ digital multimeter.
- Voltages are dc with respect to ground unless otherwise noted.
- Voltage variations may be noted due to normal production tolerances.
- All voltages are in V
- ✱ : Measurement impossibility.
- Circled numbers are waveform reference
- B + line
- B – line
- signal path (RF)

Note: The symbol display is on the component side.

The components identified by shading and mark △ are critical for safety. Replace only with part number specified.

The symbol indicate fast operating fuse. Replace only with fuse of same rating as marked.

Note: Les composants identifiés par un tramé et une marque △ sont critiques pour la sécurité. Ne les remplacer que par une pièce portant le numéro spécifié.

Le symbole indique une fusible a action rapide. Doit etre remplacee par une fusible de meme valeur, comme maque.

Reference information

RESISTOR	: RN	METAL FILM
	RC	SOLID
	· FPRD	NONFRAMMABLE CARBON
	. FUSE	NONFRAMMABLE FUSIBLE
	: RW	NONFRAMMABLE WIREWOUND
	: RS	NONFRAMMABLE METAL OXIDE
	RB	NONFRAMMABLE CEMENT
	· ※	ADJUSTMENT RESISTOR
COIL	LF-8L	MICRO INDUCTOR
CAPACITOR	. TA	TANTALUM
	. PS	STYROL
	: PP	POLYPROPYLENE
	· PT	MYLAR
	MPS	METALIZED POLYESTER
	: MPP	METALIZED POLYPROPYLENE
	: ALB	BIPOLAR
	: ALT	HIGH TEMPERATURE
	: ALR	HIGH RIPPLE

Terminal name of semiconductors in silk screen printed circuit (✱)

	Device	Printed symbol	Terminal name	Circuit
①	Transistor	T	Collector Base Emitter	
②	Transistor	—	Collector Base Emitter	
③	Diode		Cathode Anode	
④	Diode	T	Cathode Anode (NC)	
⑤	Diode	—	Cathode Anode (NC)	
⑥	Diode	T	Common Anode Cathode	
⑦	Diode	—	Common Anode Cathode	
⑧	Diode	T	Common Anode Anode	
⑨	Diode	—	Common Anode Anode	
⑩	Diode	T	Common Cathode Cathode	
⑪	Diode	—	Common Cathode Cathode	
⑫	Transistor (FET)	I	Drain Source Gate	
⑬	Transistor (FET)	I	Drain Source Gate	
⑭	Transistor (FET)	I	Source Drain Gate	
⑮	Transistor	—	C2(B)E1 C1(E)C2	
⑯	Transistor	—	C1(B)E2 C2(E)C1	
⑰	Transistor	—	C1 B2 E2 E1 B1 C2	
⑱	Transistor	—	C1 B2 E2 E1 B1 C2	
⑲	Transistor	—	E2 B1 E1 C2 C1(B)	
⑳	Transistor	—	B1 E1 E2 C1 C2	
㉑	Transistor	—	B1 E2 E1 C2 C1	
–	Discrete semiconductor			

(Chip semiconductors that are not actually used are included)

A BOARD

REF	Pin No.	VOLTAGE	REF	Pin No.	VOLTAGE	REF	Pin No.	VOLTAGE	REF	Pin No.	VOLTAGE	REF.	Pin No.	VOLTAGE
	①	0		⑩	4.7	IC007	①	5.0		⑩	5.1		⑩	1.8
	②	0		⑪	4.7		②	4.9		⑪	GND		⑪	0
	③	0		⑫	4.7		③	4.2		⑫	0		⑫	0
	④	0		⑬	8.8		④	4.9		⑬	5.0		⑬	4.4
	⑤	0		⑭	3.7		⑤	4.8		⑭	5.0		⑭	4.9
	⑥	4.8	IC001	⑮	0		⑥	4.7	IC401	⑮	5.0		⑮	4.4
	⑦	0		⑯	0		⑦	5.0		⑯	6.7		⑯	4.4
	⑧	0		⑰	4.1		⑧	4.2		⑰	6.5		⑰	4.4
	⑨	4.4		⑱	0		⑨	5.0		⑱	0.8		⑱	4.4
	⑩	0		⑲	4.4		⑩	4.2		⑲	6.7		⑲	5.1
	⑪	4.9		⑳	4.9		⑪	4.8		⑳	0.8		⑳	4.4
	⑫	4.3		㉑	4.7		⑫	4.7		㉑	1.5		㉑	4.4
	⑬	0		㉒	0		⑬	4.8		㉒	5.4	IC402	㉒	GND
	⑭	4.9		㉓	GND		⑭	4.2		㉓	0.6		㉓	4.4
	⑮	GND		㉔	2.4		⑮	GND	IC301	㉔	2.9		㉔	4.4
	⑯	2.4		㉕	2.1		⑯	4.2		㉕	3.0		㉕	4.4
	⑰	2.1		㉖	0		⑰	GND		㉖	3.8		㉖	9.0
	⑱	0		㉗	4.9		⑱	4.8		㉗	4.2		㉗	1.4
	⑲	2.3		㉘	GND	IC201	⑲	GND		㉘	4.6		㉘	3.0
	⑳	2.4		㉙	GND		⑳	4.3		㉙	5.7		㉙	15.3
	㉑	0		㉚	GND		㉑	6.9		㉚	3.4		㉚	3.1
	㉒	GND	IC002	㉛	4.8		㉒	4.2		㉛	3.4	IC403	㉛	1.4
	㉓	1.8		㉜	4.8		㉓	4.2		㉜	4.1		㉜	0
IC001	㉔	2.6		㉝	GND		㉔	4.2		㉝	4.1		㉝	5.2
	㉕	2.2		㉞	GND		㉕	4.2		㉞	2.3		㉞	29.2
	㉖	5.0		㉟	4.8		㉖	4.8		㉟	GND		㉟	5.1
	㉗	1.9		㊱	4.8		㉗	GND		㊱	2.6		㊱	GND
	㉘	0		㊲	2.2		㉘	5.7		㊲	2.7		㊲	1.2
	㉙	0		㊳	2.8		㉙	4.3		㊳	3.9		㊳	14.4
	㉚	0		㊴	2.2		㉚	4.2		㊴	3.0		㊴	-14.0
	㉛	0		㊵	3.2		㉛	5.1		㊵	3.7	IC1501	㊵	-15.4
	㉜	0		㊶	GND		㉜	GND		㊶	GND		㊶	0.8
	㉝	0		㊷	GND		㉝	4.3		㊷	GND		㊷	14.5
	㉞	0		㊸	4.9		㉞	4.4		㊸	GND		㊸	1.2
	㉟	0		㊹	GND		㉟	8.9		㊹	4.4		㊹	-0.3
	㊱	0	IC003	㊺	GND		㊱	3.5		㊺	4.4		㊺	0
	㊲	0		㊻	4.9		㊲	4.2		㊻	4.4		㊻	0
	㊳	0		㊼	5.0		㊳	5.2		㊼	4.4	IC1502	㊼	GND
	㊴	0		㊽	GND		㊴	4.2		㊽	4.4		㊽	0
	㊵	2.7	IC004	㊾	GND		㊵	2.1		㊾	4.4		㊾	-0.3
	㊶	2.7		㊿	4.9		㊶	5.6		㊿	4.4		㊿	4.9
	㊷	4.8		(1)	4.9		㊷	3.9	IC401	(1)	9.0		(1)	-5.1
	㊸	4.8		(2)	GND		㊸	4.4		(2)	3.8	IC1601	(2)	10.9
	㊹	GND	IC007	(3)	GND	IC301	㊹	3.5		(3)	4.8		(3)	GND
	㊺	GND		(4)	4.8		㊺	8.8		(4)	4.8		(4)	9.0
	㊻	4.7		(5)	GND		㊻	4.8		(5)	GND		(5)	11.9
	㊼	0		(6)	4.8		㊼	0		(6)	3.9	IC1602	(6)	GND
	㊽	0		(7)	4.8		㊽	4.4		(7)	3.9		(7)	8.0
	㊾	4.7		(8)	GND		㊾	6.1		(8)	1.8			

A BOARD

REF	VOLTAGE	REF	VOLTAGE	REF.	VOLTAGE
Q001	E GND	Q213	E 5.0	Q312	E 5.1
	C 4.8		C 0.3		C 8.8
	B 0		B 4.9		B 5.7
Q002	E 2.0	Q214	E 5.0	Q313	E 4.9
	C GND		C 4.9		C 7.7
	B 0		B 5.0		B 5.3
Q003	E 3.8	Q216	E GND	Q314	E 0.9
	C GND		C 0		C 4.5
	B 3.8		B 0		B 1.5
Q004	E 4.9	Q217	E GND	Q402	E GND
	C 1.0		C 0		C 0
	B 5.4		B 0		B 3.6
Q005	E 4.9	Q218	E 8.9	Q403	E 26.2
	C 0.7		C 0		B 13.2
	B 4.9		B 0		E 11.9
Q006	E 8.9	Q219	E 4.5	Q405	C -13
	C 0		C 6.2		B 11.8
	B 8.8		B 5.1		E 11.8
Q007	E GND	Q220	E 4.1	Q406	C -13
	C 4.8		C 9.0		B 11.9
	B 0.1		B 4.8		E 0
Q008	E GND	Q226	E 4.4	Q408	C GND
	C 4.3		C 8.4		B 3.6
	B 0.1		B 5.1		E 0
Q009	E 5.3	Q301	E 1.5	Q409	C GND
	C 4.8		C GND		B 3.6
	B 0		B 0.9		E GND
Q013	E 3.7	Q302	E 1.5	Q410	C 0
	C 5.0		C GND		B 4.1
	B 4.3		B 0.9		E GND
Q015	E GND	Q303	E 3.8	Q411	C 0
	C 0		C 8.8		B 4.1
	B -0.2		B 4.4		E GND
Q016	E GND	Q304	E 3.5	Q1101	C 4.1
	C 0		C 8.6		B 0
	B -0.2		B 3.9		E 0.1
Q017	E GND	Q306	E 5.9	Q1501	C 14.4
	C 0		C 8.2		B -0.4
	B -0.2		B 6.8		E GND
Q201	E 1.8	Q306	E 1.8	Q2105	C 0
	C 4.5		C GND		B 0.6
	B 1.5		B 0.9		E 0.2
Q206	E GND	Q307	E 4.3	Q2106	C 5.0
	C 0		C 8.8		B 0.2
	B 0		B 5.0		
	E GND		E 5.1		
Q207	C 5.3	Q308	C GND		
	B 0		B 4.5		
	E GND		E 5.1		
Q209	C 0	Q311	C 8.8		
	B 0		B 4.2		

A BOARD

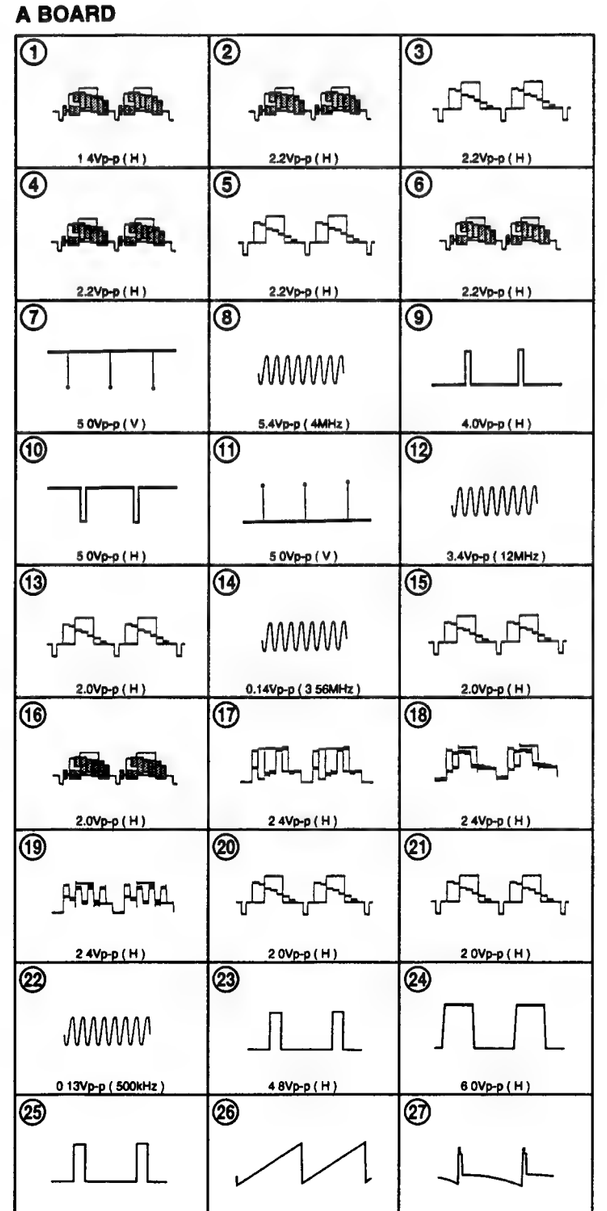

A BOARD * MARK LIST

	KP-48S35/53S35/61S35	KP-46C36
CN402	#	3P WHT-S-MICRO
CN1101	#	11P WHT-S-MICRO
D1102	#	UDZ 17-10B
D1103	#	UDZ 17-10B
D1104	#	UDZ 17-10B
D1105	#	UDZ 17-10B
D1106	#	UDZ 17-10B
D1107	#	UDZ 17-10B
R262	#	82k :CHIP
R280	#	470 :CHIP
R281	#	470 :CHIP
R282	#	470 :CHIP
R283	#	470 :CHIP
R284	#	470 :CHIP
R285	#	470 :CHIP

Mark : not mounted

Schematic diagram

A board ➡

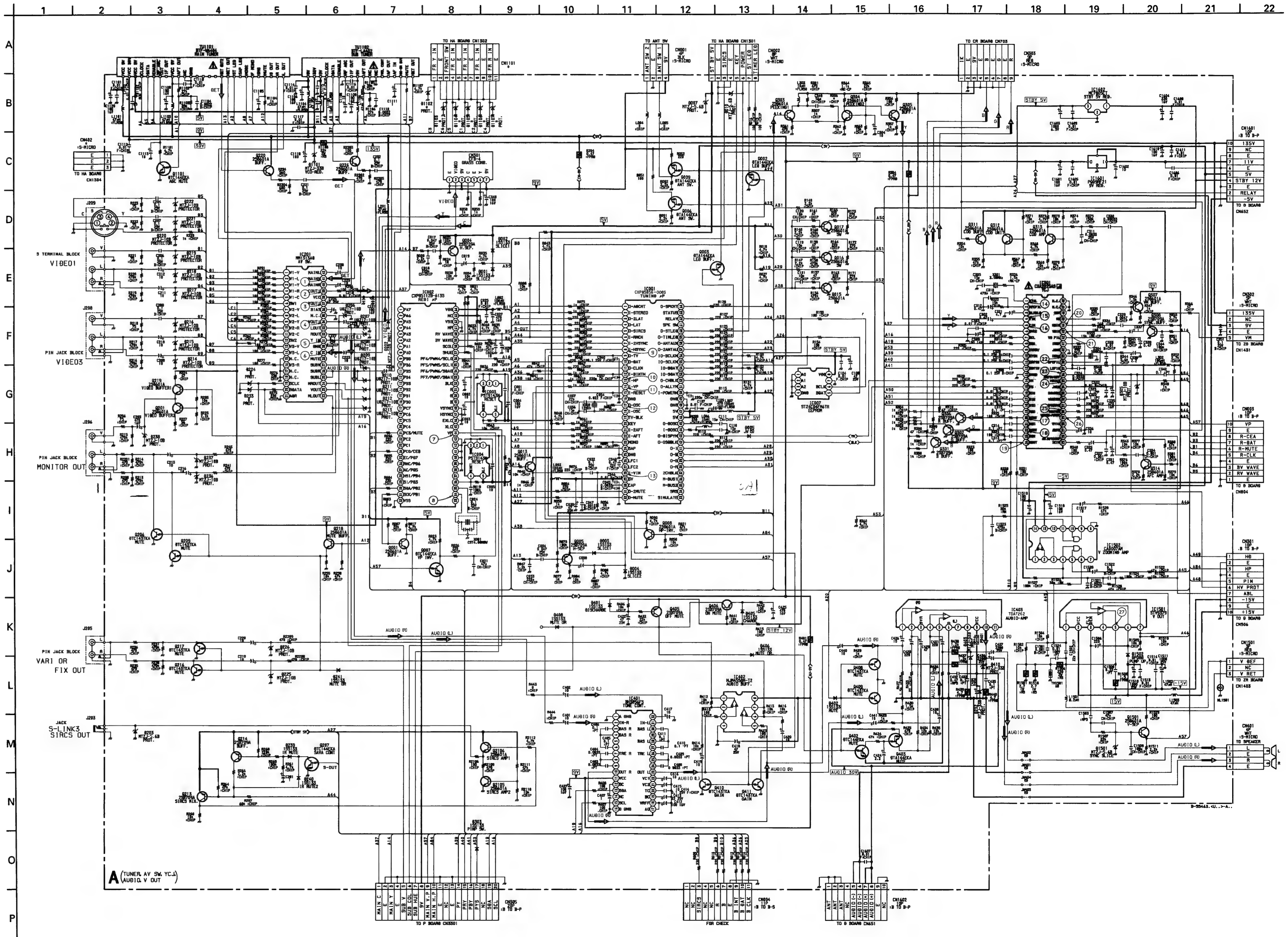

A [TUNER, AV SW, YCJ, AUDIO, V OUT]

– A BOARD –

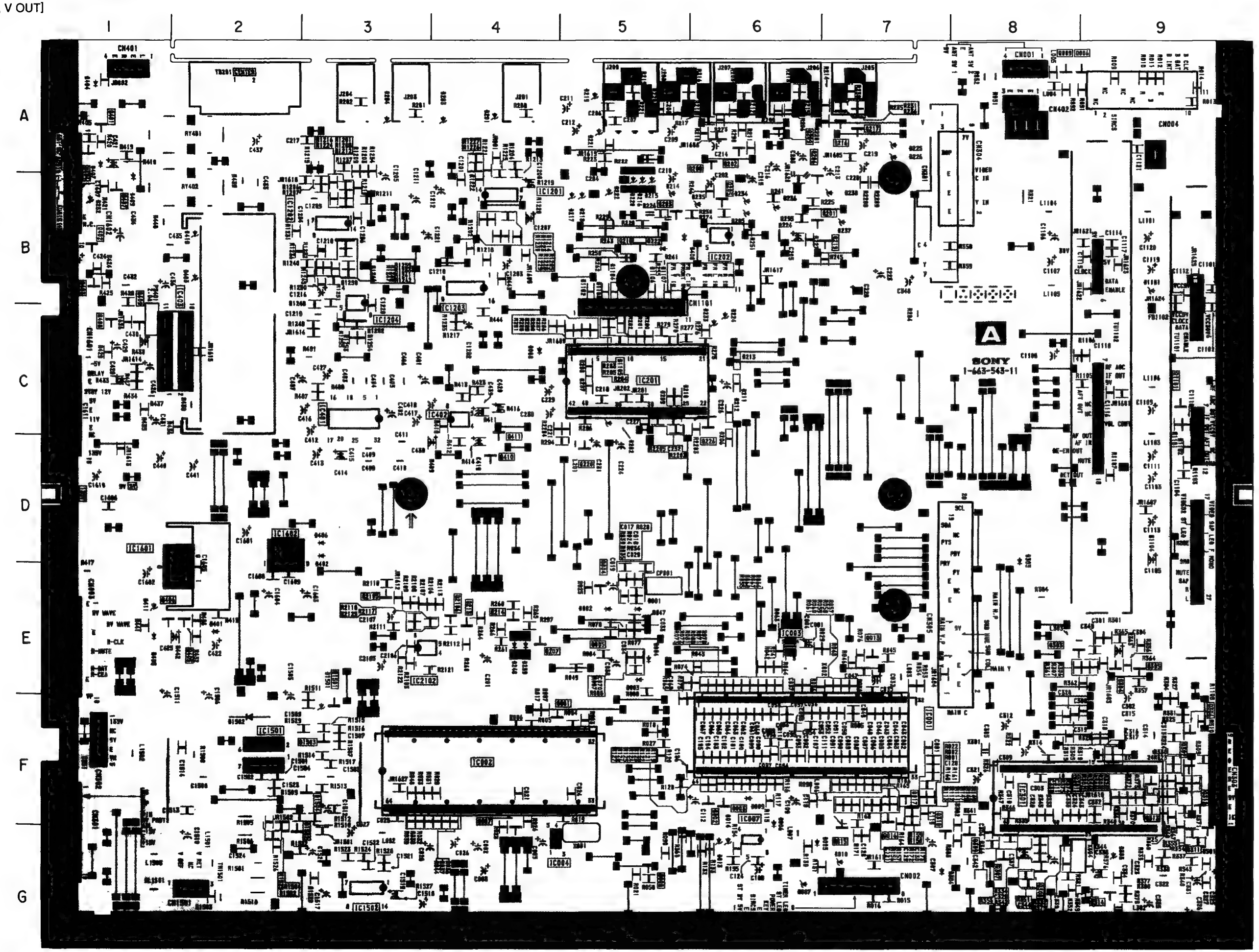

A BOARD

IC

IC001	F-7
IC002	F-4
IC003	E-6
IC004	G-4
IC007	G-6
IC201	C-5
IC301	F-8
IC401	C-3
IC402	C-4
IC403	C-1
IC1501	F-2
IC1502	G-3
IC1601	D-1
IC1602	D-2

TRANSISTOR

			*
Q001	F-5	①	
Q002	F-6	①	
Q003	F-6	①	
Q004	E-5	①	
Q005	E-5	①	
Q006	A-8	①	
Q007	G-4	①	
Q008	G-5	①	
Q009	A-8	①	
Q013	E-7	①	
Q015	F-7	①	
Q016	F-7	①	
Q017	F-7	①	
Q201	B-6	①	
Q206	B-6	①	
Q207	E-4	①	
Q209	A-6	①	
Q213	E-4	①	
Q214	E-4	①	
Q216	A-7	①	
Q217	A-7	①	
Q218	B-5	①	
Q219	B-7	①	
Q220	C-5	①	
Q226	C-6	①	
Q301	F-9	①	
Q302	F-9	①	
Q303	E-8	①	
Q304	E-9	①	
Q305	E-9	①	
Q306	F-9	①	
Q307	G-8	①	
Q308	G-8	①	
Q711	G-9	①	
Q712	F-9	①	
Q713	F-9	①	
Q714	G-9	①	
Q402	B-1	①	
Q403	B-1	①	
Q405	E-2	①	
Q406	E-1	①	
Q408	C-1	①	
Q409	C-1	①	
Q410	D-4	①	
Q411	D-4	①	
Q1101	C-9	①	
Q1501	F-3	①	
Q2105	E-3	①	
Q2106	E-4	①	

DIODE

		*
D001	E-5	–
D002	E-5	–
D003	E-5	–
D004	E-5	–
D007	G-6	–
D010	G-7	–
D202	C-5	–
D203	A-4	–
D206	C-6	③
D207	C-5	③
D208	C-5	③
D209	C-5	③
D210	C-5	③
D211	C-6	③
D212	C-6	③
D213	C-6	③
D214	B-5	–
D215	B-5	–
D216	B-5	–
D217	B-5	–
D218	B-5	–
D219	A-5	–
D220	B-5	–
D221	A-5	–
D222	B-5	–
D225	A-7	–
D226	A-7	–
D232	B-1	–
D236	B-6	–
D237	B-7	–
D238	B-7	–
D239	E-4	–
D240	E-4	–
D241	B-5	–
D303	D-8	–
D305	G-9	–
D401	E-2	–
D402	D-3	–
D403	B-2	–
D405	E-1	–
D406	D-3	–
D408	B-6	–
D410	B-2	–
D1101	B-9	–
D1102	B-5	③
D1103	B-5	③
D1104	B-5	③
D1105	C-5	③
D1106	B-5	③
D1107	B-5	③
D1501	F-3	–
D1502	F-3	–

Schematic diagrams
HA, P boards ➡

HA BOARD * MARK LIST

	KP-48S35/53S35/61S35	KP-46C36
C1301	#	0.1 :PT
C1302	#	0.47
C1305	#	0.1 :PT
C1306	#	10
C1307	#	10
CN1302	#	11P WHT-L :S-MICRO
CN1304	#	3P WHT-L :S-MICRO
D1301	#	MTZJ-10
D1302	#	MTZJ-10
D1303	#	MTZJ-10
D1306	#	MTZJ-10
D1307	#	MTZJ-10
D1308	#	MTZJ-10
J1301	#	TERMINAL BLOCK :S
R1301	#	4.7k
R1308	#	470k
R1309	#	470k
R1311	#	75
R1312	#	75
R1315	#	JW (5)
R1316	#	JW (5)
R1317	#	

Mark : not mounted

HA BOARD

REF.	Pin No.	VOLTAGE
IC1301	①	5.0
	②	5.0
	③	GND

HA [IN/OUT SELECT]

– HA BOARD –

• : Pattern from the side which enables seeing.
• : Pattern of the rear side.

P [PIP ENCODE, CHROMA DECODE]

– P BOARD – <Component Side>

<Conductor Side>

P BOARD

REF.		VOLTAGE
Q3301	E	6.3
	C	8.9
	B	6.9
Q3305	E	1.0
	C	GND
	B	0.4
Q3306	E	1.3
	C	GND
	B	0.7
Q3307	E	1.1
	C	GND
	B	0.5
Q3308	E	GND
	C	2.9
	B	0
Q3310	E	GND
	C	6.5
	B	-0.4
Q3312	E	0.6
	C	0
	B	0
Q3313	E	GND
	C	0
	B	0.8

P BOARD

REF.	Pin No.	VOLTAGE
IC3301	①	GND
	②	GND
	③	3.8
	④	6.6
	⑤	GND
	⑥	0.1
	⑦	0
	⑧	1.7
	⑨	0.3
	⑩	7.9
	⑪	7.9
	⑫	4.3
	⑬	0
	⑭	GND
	⑮	0.1
	⑯	2.2
	⑰	4.2
	⑱	2.9
	⑲	2.8
	⑳	4.6
	㉑	GND
	㉒	2.7
	㉓	8.9
IC3302	I	GND
	G	5.1
	O	GND
IC3303	①	3.0
	②	2.4
	③	2.2
	④	5.0
	⑤	GND
	⑥	0.4
	⑦	0
	⑧	0.5
	⑨	5.0
	⑩	1.9
	⑪	0
	⑫	-2.9
	⑬	GND
	⑭	GND
	⑮	0.1
	⑯	0.7
	⑰	0.1
	⑱	0.2
	⑲	4.8
	⑳	4.8
	㉑	GND
	㉒	GND
	㉓	1.4
	㉔	5.0
	㉕	2.3
	㉖	4.0
	㉗	2.3

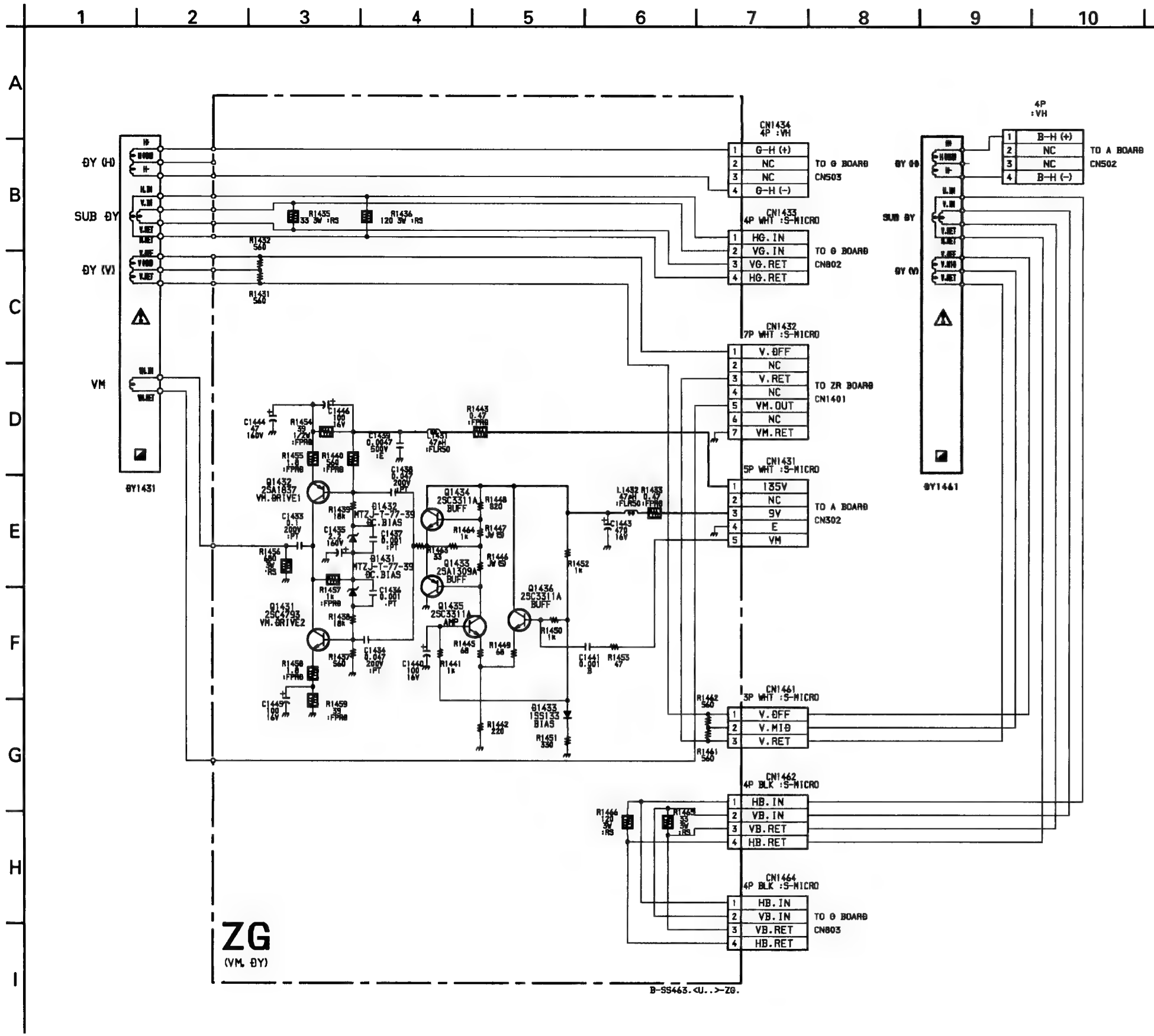

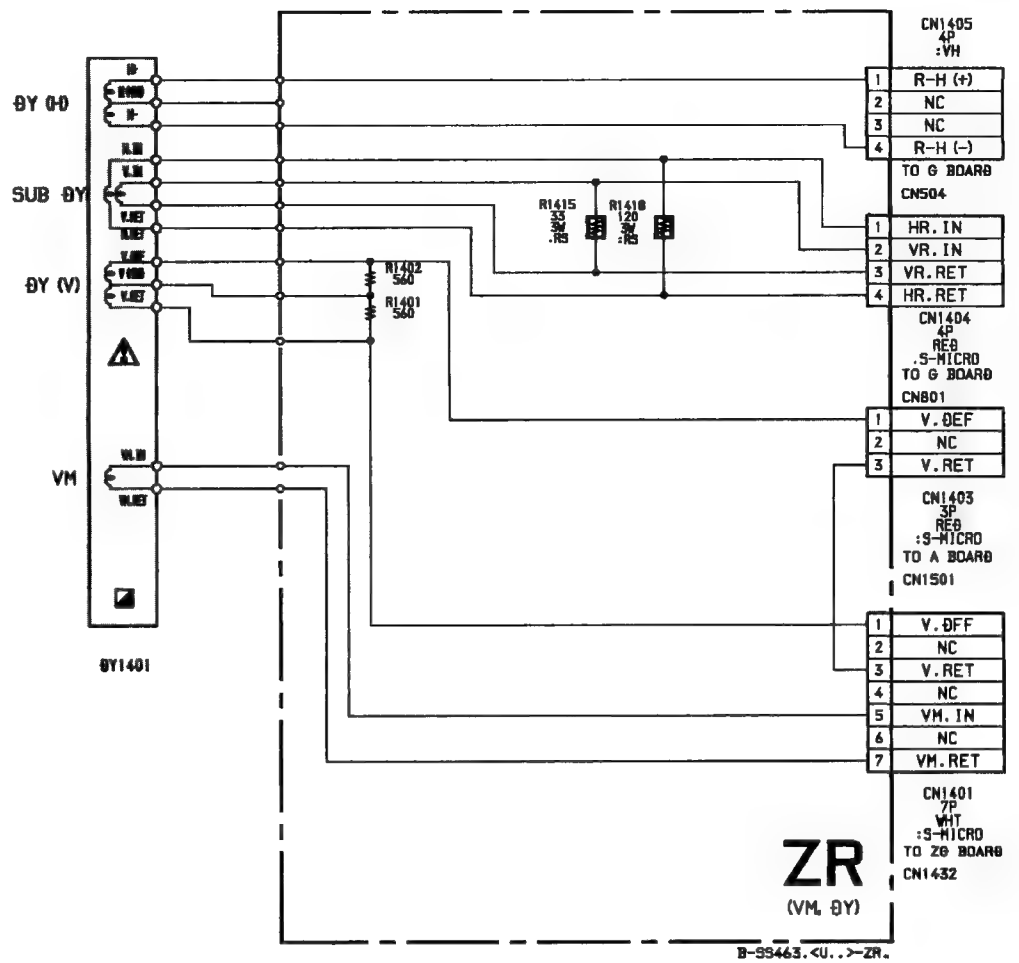

ZG BOARD

REF.		VOLTAGE
Q1431	E	0.5
	C	67.2
	B	0.9
Q1432	E	138.4
	C	67.2
	B	134.4
Q1433	E	5.8
	C	GND
	B	5.7
Q1434	E	5.8
	C	9.0
	B	5.7
Q1435	E	2.1
	C	5.7
	B	2.7
Q1436	E	2.1
	C	9.0
	B	2.7

NOTE:
The circuit indicated as left contains high voltage of over 600 Vp-p Care must be paid to prevent an electric shock in inspection or repairing.

Schematic diagrams
← ZG, ZR boards

ZR [VM, DY] ZG [VM, DY]

– ZR BOARD –

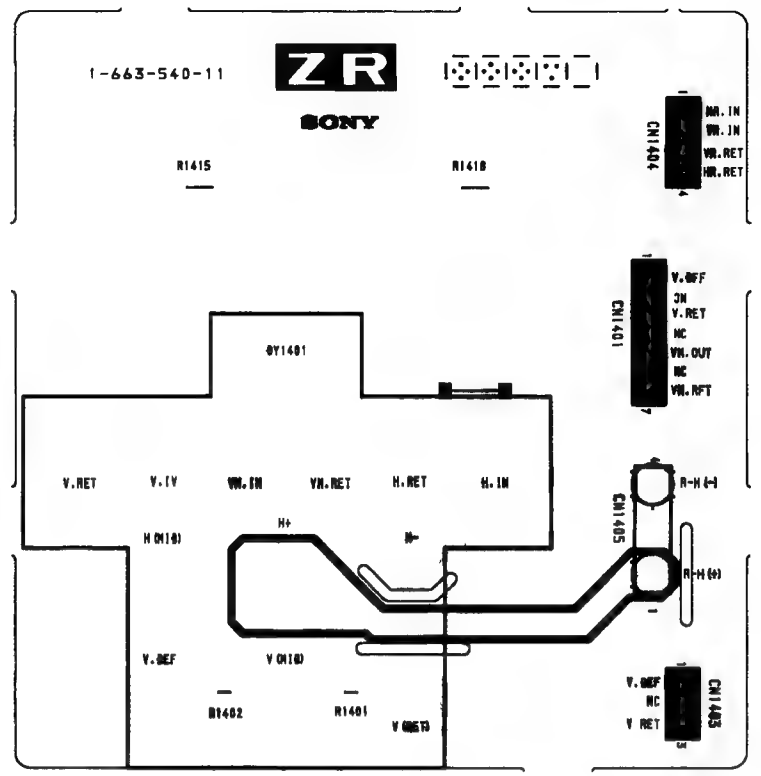

– ZG BOARD –

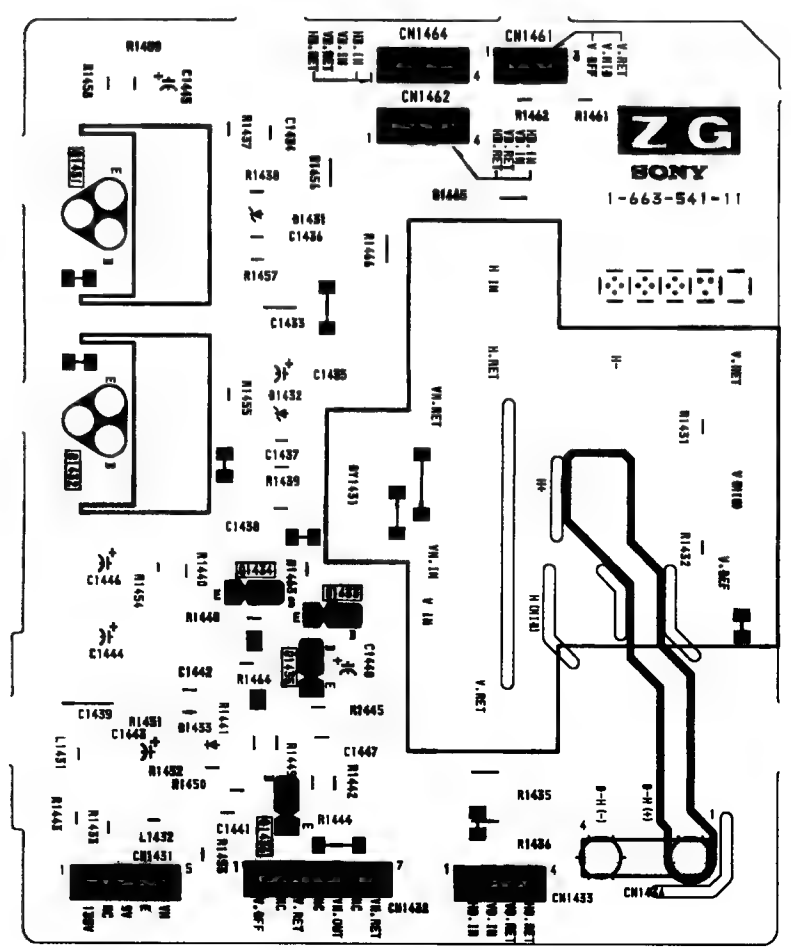

G [POWER SUPPLY, H/V WAVE GEN, RGB CONV, SUB DY DRIVE]

G BOARD

IC	
IC501	E–8
IC601	A–3
IC651	A–5
IC652	B–6
IC653	C–6
IC655	C–2
IC801	E–11
IC802	E–9
IC803	F–11
IC804	C–7
IC805	F–9
IC806	C–9
IC808	C–11
IC809	B–10
IC810	B–8
IC811	G–9

TRANSISTOR	
Q501	E–4
Q502	E–4
Q503	F–8
Q504	G–8
Q505	E–7
Q506	F–8
Q507	F–7
Q651	C–3
Q652	A–6
Q653	A–6
Q654	A–5
Q655	A–6
Q656	A–5
Q657	D–4
Q658	D–4
Q659	A–5
Q660	C–4
Q661	D–3
Q662	C–4
Q802	G–11
Q803	F–10
Q804	E–10
Q805	G–11
Q809	A–10
Q810	A–7

DIODE	
D501	E–8
D502	E–8
D504	D–8
D507	E–8
D508	F–5
D509	F–4
D510	F–4
D511	E–7
D513	F–2
D514	E–1
D515	G–1
D517	G–6
D519	F–8
D520	G–2
D521	F–3
D524	F–8
D527	E–7
D528	E–7
D602	A–2
D651	C–3
D652	C–3
D653	B–6
D654	B–6
D655	C–4
D656	B–5
D657	A–5
D658	B–5
D659	D–3
D660	C–3
D661	D–5
D662	A–5
D664	A–5
D669	C–3
D670	A–5
D691	D–1
D692	D–2
D693	D–1
D694	D–1
D801	E–11
D802	E–11
D803	E–11
D804	E–11
D820	D–11
D828	F–11
D829	G–11
D835	C–8
D840	G–10
D842	G–10
D845	G–10
D846	G–10
D847	F–9
D848	F–9
D849	F–9
D850	F–11
D852	G–9
D853	G–9
D854	G–9
D855	G–10
D856	G–10
D857	G–9
D859	G–9
D860	G–9

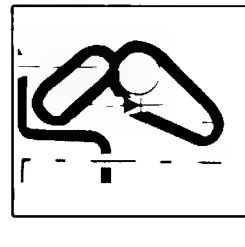

NOTE:
The circuit indicated as left contains high voltage of over 600 Vp-p Care must be paid to prevent an electric shock in inspection or repairing.

– G BOARD –

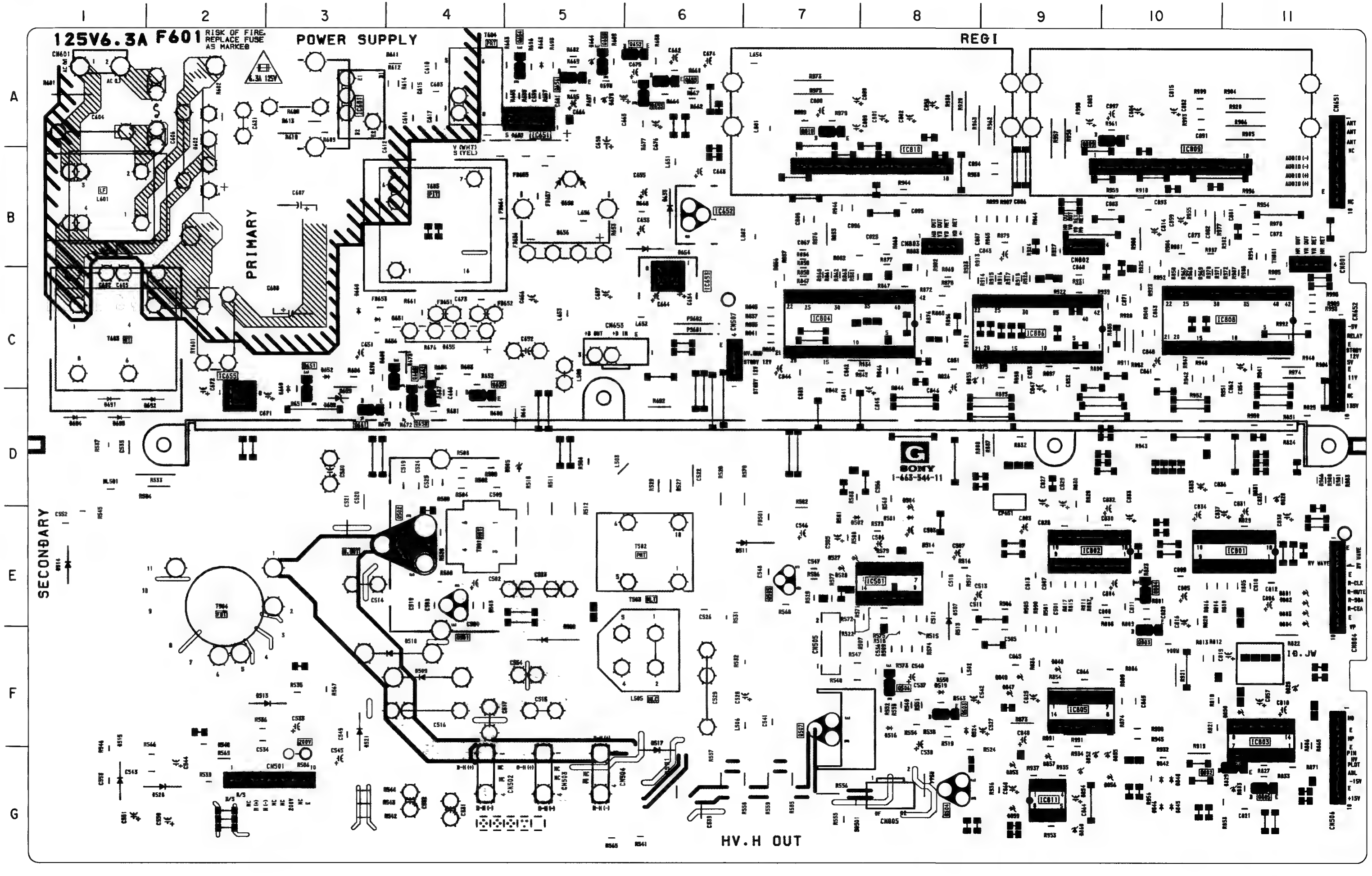

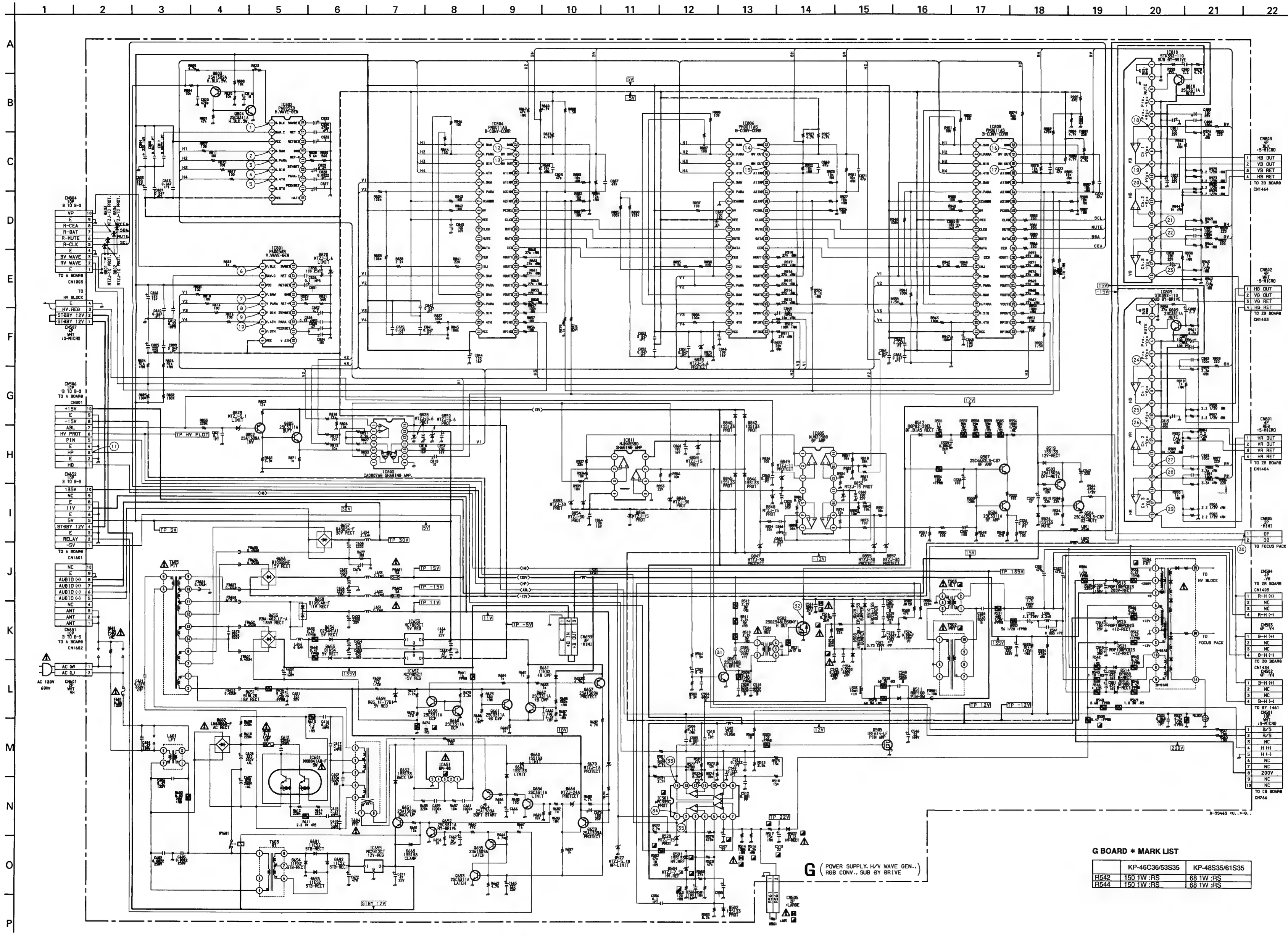

G (POWER SUPPLY, H/V WAVE GEN., RGB CONV., SUB BY DRIVE)

G BOARD * MARK LIST

	KP-46C36/53S35	KP-48S35/61S35
R542	150 1W :RS	68 1W :RS
R544	150 1W :RS	68 1W :RS

G BOARD

REF	Pin No.	VOLTAGE	REF	Pin No.	VOLTAGE	REF	Pin No.	VOLTAGE	REF	Pin No.	VOLTAGE	REF	Pin No.	VOLTAGE
IC501	①	3.4	IC802	①	0	IC804	①	0.1	IC806	①	0	IC808	①	0
	②	0.7		②	-0.9		②	4.9		②	0		②	0
	③	12.1		③	0		③	4.8		③	0.4		③	-0.2
	④	3.3		④	-1.0		④	0		④	4.7		④	0.4
	⑤	1.8		⑤	-5.1		⑤	0		⑤	0.1		⑤	GND
	⑥	7.9		⑥	0		⑥	0		⑥	4.9		⑥	GND
	⑦	8.1		⑦	-0.9		⑦	0		⑦	4.8		⑦	GND
	⑧	1.4		⑧	0.3		⑧	0		⑧	0		⑧	-14.3
	⑨	2.2		⑨	1.2		⑨	0.2		⑨	0		⑨	-15.3
	⑩	5.5		⑩	GND		⑩	GND		⑩	0		⑩	14.5
	⑪	1.8		⑪	-1.9		⑪	7.2		⑪	0		⑪	-0.1
	⑫	GND		⑫	1.2		⑫	7.0		⑫	0.1		⑫	-0.1
	⑬	1.4		⑬	-1.1		⑬	7.2		⑬	GND		⑬	-15.3
	⑭	9.9		⑭	-0.4		⑭	7.0		⑭	12.1	IC809	①	-0.2
	⑮	GND		⑮	-0.4		⑮	12.1	IC805	①	0		②	14.5
IC601	①	-1.9		①	-0.3		①	0		②	0		③	0.5
	②	136.0		②	-0.3		②	0		③	-0.9		④	-15.3
	③	274.0		③	1.6		③	-0.8		④	0		⑤	0.3
	④	136.0	IC803	④	0.3		④	0		⑤	-1.0		⑥	0.3
	⑤	134.0		⑤	GND		⑤	0		⑥	0		⑦	-0.2
	⑥	134.0		⑥	0		⑥	-0.4		⑦	-0.4		⑧	-0.2
	⑦	2.4		⑦	0		⑦	-12.3		⑧	4.9		⑨	-15.3
IC651	①	13.8		⑧	0		⑧	0		⑨	4.9		⑩	-0.4
	②	GND		⑨	4.9		⑨	0		⑩	-5.1		①	GND
	③	-1.5		⑩	-5.1		⑩	0.8		⑪	4.8		②	GND
IC652	①	GND	IC804	①	0		⑪	0		⑫	4.9		③	-14.5
	②	-5.1		②	-0.9		⑫	-0.9		⑬	5.1		④	-15.3
	③	10.6		③	0		⑬	0		⑭	4.7		⑤	14.5
IC653	①	GND		④	-1.0		⑭	-1.0		⑮	-2.1		⑥	0.2
	②	4.9		⑤	0		⑮	0		①	0		⑦	-15.3
	③	15.7		⑥	-0.4		①	-0.4		②	-0.8	IC810	①	0.3
IC655	①	GND		⑦	-5.1		②	GND		③	0		②	14.5
	②	11.9		⑧	4.9		③	4.9		④	-0.9		③	0.1
	③	0.2		⑨	-5.1		④	-5.1		⑤	0		④	-15.3
	④	1.2		⑩	-2.2		⑤	4.8		⑥	-0.5		⑤	0
	⑤	4.9		⑪	0		⑥	4.9		⑦	4.9		⑥	0
	⑥	0		⑫	-0.8		⑦	0.1		⑧	0.1		⑦	0.1
	⑦	-0.8		⑬	0		⑧	4.7		⑨	0		⑧	-15.3
	⑧	0	IC806	⑭	-0.9		⑨	-2.1		⑩	0	IC811	①	0.2
	⑨	-1.1		⑮	0		⑩	0		⑪	-0.5		②	-1.2
	⑩	-5.1		①	-0.5		⑪	-0.8		⑫	0		③	-0.3
	⑪	0.4		②	4.9		⑫	0		⑬	0.2		④	-0.3
	⑫	-0.9		③	-0.1		⑬	-0.9		⑭	0.2		⑤	-12.3
	⑬	0.3		④	0		⑭	0		⑮	4.7		⑥	GND
	⑭	1.2		⑤	-0.4		⑮	-0.5		①	0		⑦	0
	⑮	GND		⑥	0		①	4.9		②	4.9		⑧	0.6
	①	-1.5		⑦	0		②	-0.4		③	4.8		⑨	12.1
	②	1.2		⑧	0		③	0		④	0			
	③	-1.6		⑨	0		④	0		⑤	0			
	④	0.5		⑩	0		⑤	0		⑥	0			
IC602	①	1.1		⑪	0.5		⑥	0		⑦	0			
	②	4.9		⑫	4.7		⑦	0		⑧	0			

G BOARD

REF	VOLTAGE	REF	VOLTAGE
Q501	E GND	Q658	E 0.4
	C 47.0		C 4.9
	B -0.4		B 0.6
Q502	E GND	Q659	E 17.6
	C 140.0		C 0
	B 0		B 17.6
Q505	G 9.9	Q660	E GND
	D 21.9		C 0.6
	S GND		B 0.6
Q506	E 1.1	Q661	E 2.4
	C 11.3		C 5.2
	B 1.7		B 3.1
Q507	E 11.5	Q662	E 2.4
	C 780.0		C 4.9
	B 12.1		B 2.7
Q651	E 11.9	Q802	E 2.4
	C 11.9		C 2.3
	B 11.2		B 4.0
Q652	E GND	Q803	E 2.4
	C 0		C 0
	B 0.7		B 0.5
Q653	E GND	Q804	E GND
	C 17		C 0.5
	B 0		B 0
Q654	E 14.0	Q805	E 1.7
	C GND		C 12.1
	B 13.6		B 2.3
Q655	E 17	Q809	E -15.3
	C 0		C -14.3
	B 17		B -15.3
Q656	E GND	Q810	E -15.3
	C 13.6		C -14.5
	B 0		B -15.3
Q657	E 4.9		
	C 0		
	B 4.9		

G BOARD

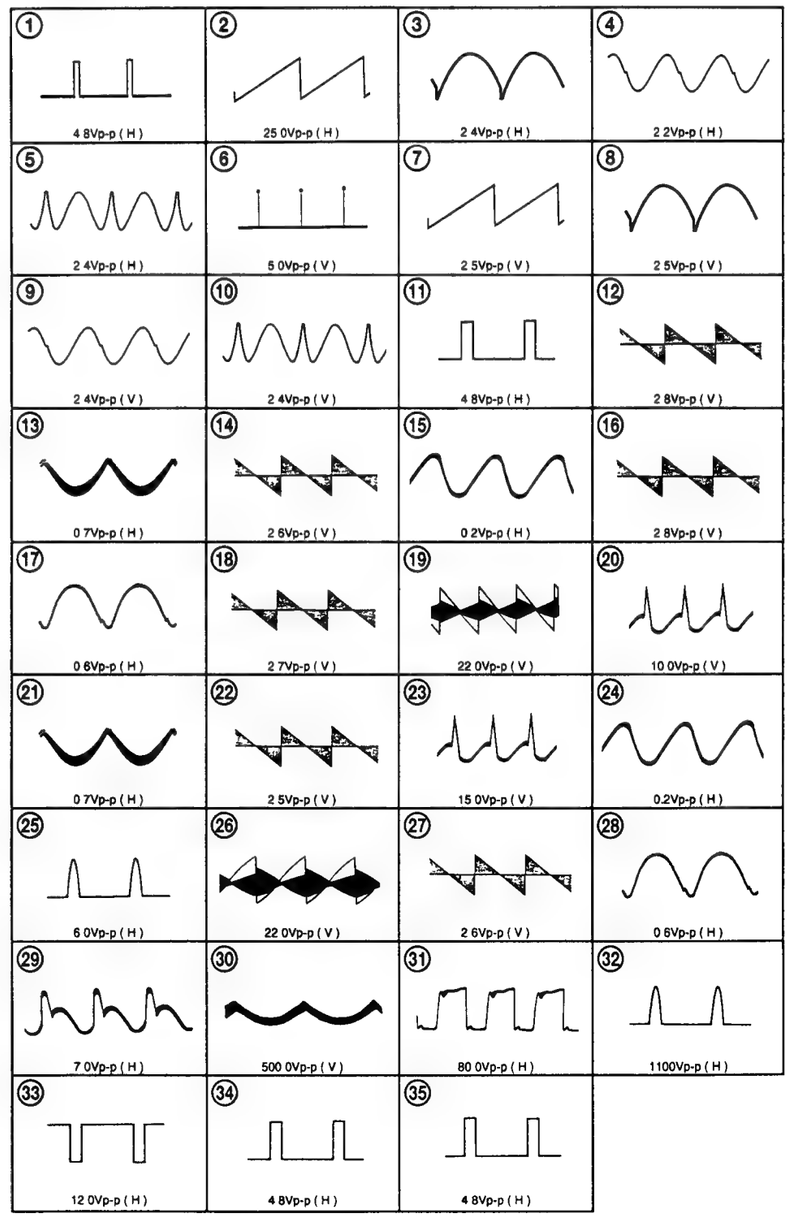

NOTE:
The circuit indicated as left contains high voltage of over 600 Vp-p. Care must be paid to prevent an electric shock in inspection or repairing.

CR [R OUT]

– CR BOARD –

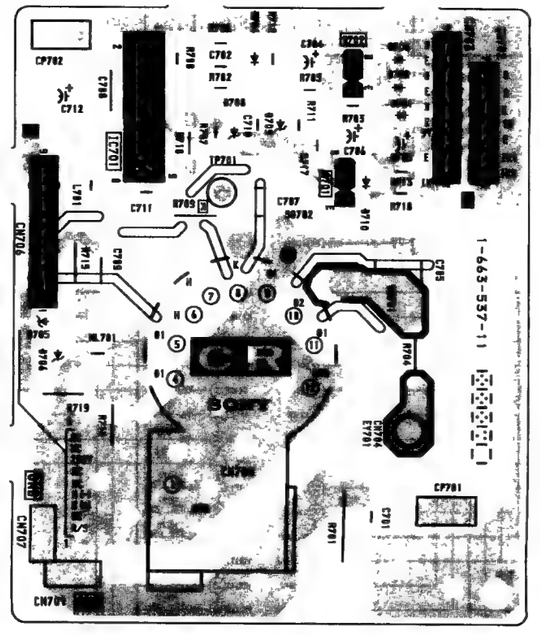

CR BOARD

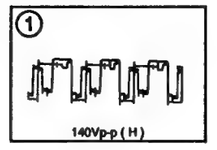

CR BOARD

REF.	Pin No.	VOLTAGE
IC701	3	2.6
	4	GND
	5	4.1
	6	196.5
	7	137.1
	8	135.0

CR BOARD

REF.		VOLTAGE
Q701	E	4.4
	C	0
	B	4.1
Q702	E	2.2
	C	GND
	B	1.9

CG [G OUT]

– CG BOARD –

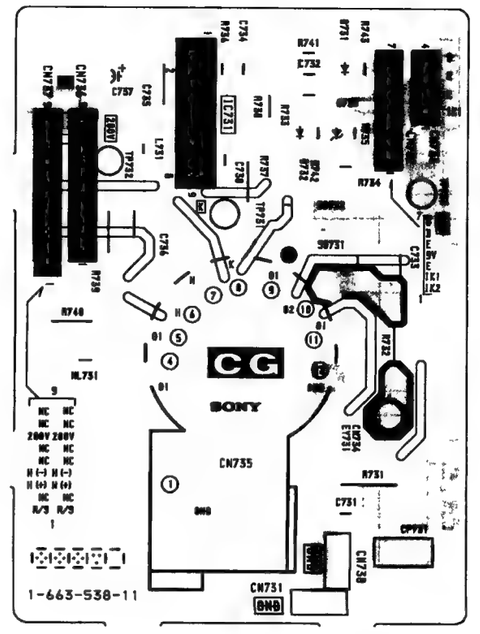

CG BOARD

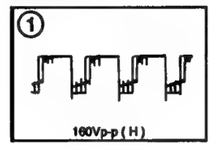

CG BOARD

REF.	Pin No.	VOLTAGE
IC731	3	2.5
	4	GND
	5	3.5
	6	199.6
	7	145.0
	8	144.6

CB [B OUT]

– CB BOARD –

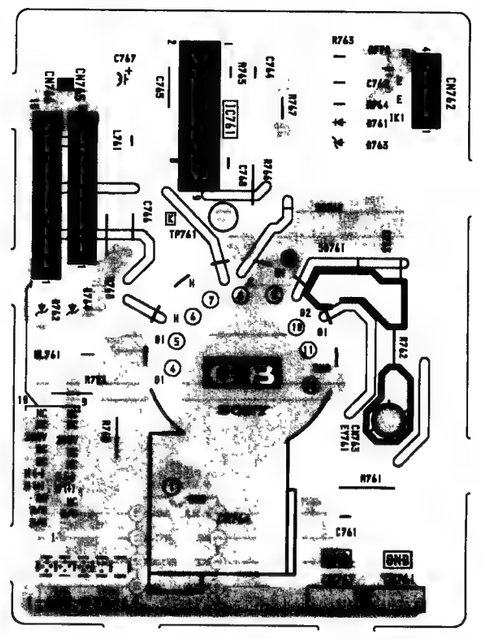

CB BOARD

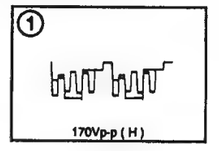

CB BOARD

REF.	Pin No.	VOLTAGE
IC761	3	2.5
	4	GND
	5	4.9
	6	196.6
	7	113.0
	8	109.7

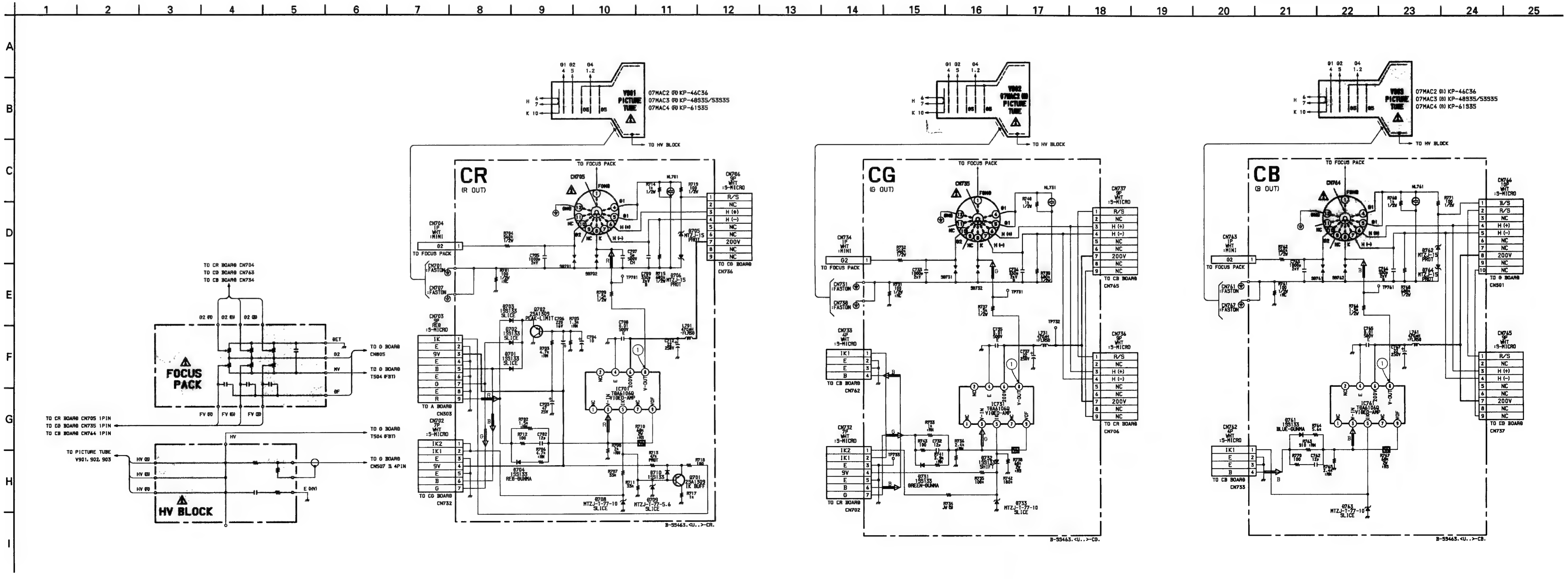

6-5. SEMICONDUCTORS

BH3856FS-E2
SDA9288X-A141

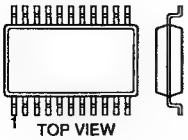

32pin SOP

CA0007AD
NJM2058D
µPC339C

14pin DIP

CA0007AM

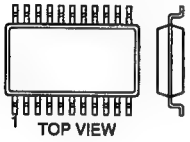

14pin SOP

CXA2025AS

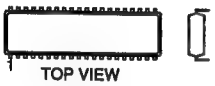

48pin DIP

CXP85112B-613S
CXP85856-005S

64pin DIP

LM7805CT
MC7805CT
MC7812CT
PQ09RF21
TA7805S
TA7812S

MC7905CT

MM1313AD
PM0011AS

42pin DIP

M5218AP
NJM4558D

8pin DIP

NJM4558M-T2
ST24C04FM6TR
µPC4558G2
X24C04S8

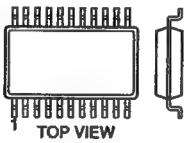

8pin SOP

PA0053B

18pin DIP

PST9143NL

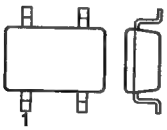

5pin chip

SBX1780-51

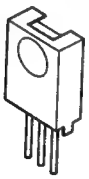

STK392-110

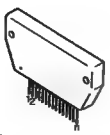

STV9379

TDA2009A

TDA6106Q

9pin ZIP

TDA8315T/N3A-T

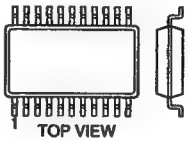

24pin SOP

DTA144EKA-T146
DTC143TKA-T146
DTC144EKA-T146
2SA1162G
2SB709A-QRS-TX
2SD601A-Q
2SD601A-QRS-TX

IRF614
IRF614-LF

MC780CT
2SA1837
2SC4793

MX0841-AB-F

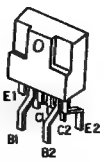

2SA1175-HFE
2SA1309A-QRSTA
2SC2785-HFE
2SC3311A-QRSTA

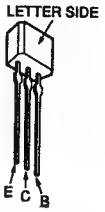

2SC2688-LK

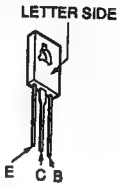

2SC4632LS-CB7

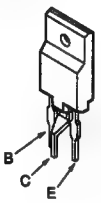

2SD2348 (LB SONY-1)

DTZ10B
UDZ-TE-17-10B

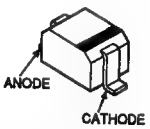

D1NL20
EL1Z
GP08D
GP08DPKG23
RGP02-20EL-6394
RGP10GPKG23

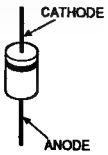

D1NS4
HZS9.1NB2
MTZJ-30A
MTZJ-33B
MTZJ-7.5B
MTZJ-T-77-10
MTZJ-T-77-10B
MTZJ-T-11
MTZJ-T-15
MTZJ-T-20A
MTZJ-T-24A
MTZJ-T-3.6
MTZJ-T-30
MTZJ-T-33B
MTZJ-T-39
MTZJ-T-5.1
MTZJ-T-5.1B
MTZJ-T-5.6
MTZJ-T-5.6B
MTZJ-T-7.5B
MTZJ-T-9.1B
RD10ESB2
RD11ES-B2
RD20ES-B2
RD24ES-B
RD3.6ES-B1
RD39ES-B2
RD5.1ES-B1
RD5.1ES-B2
RD5.6ESB2
11ES2

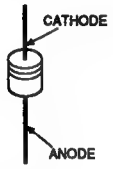

D2S4MF
D2SMTA1

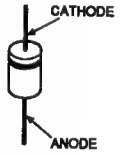

D4SBS4-F
D10SBS4F
LN4SB60
RBA-402LLF-A

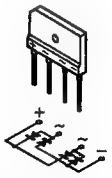

D10SC4M

ERC06-15S
1SS133T-77

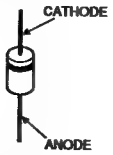

ERD29-08J

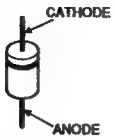

SLR-325VCT31

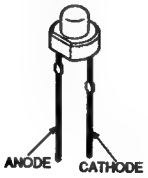

SECTION 7
EXPLODED VIEWS

The componants identified by shading and mark ⚠ are critical for safety.
Replace only with part number specified.

Les composants identifies par une trame et une marque ⚠ sont critiques pour la securite.
Ne les remplacer que par une piece portant le numero specifie.

NOTE:

- Items with no part number and no description are not stocked because they are seldom required for routine service.
- The construction parts of an assembled part are indicated with a collation number in the remark column.
- Items marked " * " are not stocked since they are seldom required for routine service. Some delay should be anticipated when ordering these items.

7-1. COVER (KP-46C36/48S35/53S35)

● : 7-685-648-79 +BVTP 3X12
▲ : 7-685-661-14 +BVTP 4X12
▼ : 7-685-661-79 +BVTP 4X12
◆ : 7-685-666-79 +BVTP 4X30

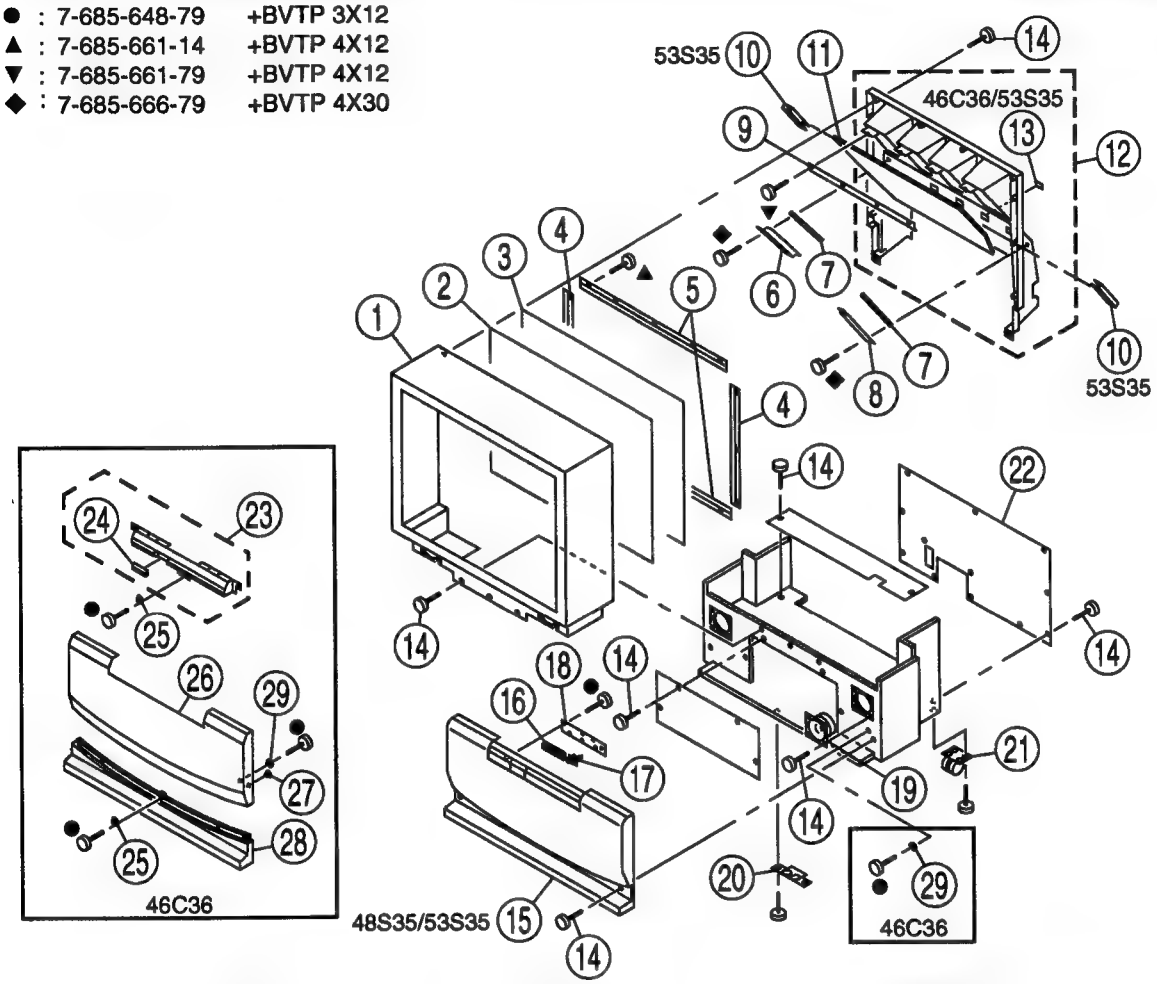

REF. NO.	PART NO.	DESCRIPTION	REMARK
1	X-4032-998-1	BEZNET ASSY (46C36)	
	X-4032-999-2	BEZNET ASSY (53S35)	
	X-4034-438-1	BEZNET ASSY (48S35)	
2	4-036-466-11	PLATE (L), DIFFUSION (53S35)	
	4-037-360-11	PLATE (L), DIFFUSION (46C36)	
	4-058-454-11	PLATE (L), DIFFUSION (48S35)	
3	4-036-469-11	PLATE (F), DIFFUSION (53S35)	
	4-057-324-11	PLATE (F), DUFFUSION (46C36)	
	4-058-455-11	PLATE (F), DIFFUSION (48S35)	
4	* 4-048-152-01	HOLDER (S), SCREEN (46C36/48S35)	
	* 4-048-152-11	HOLDER (S), SCREEN (53S35)	
5	* 4-048-159-01	HOLDER (L), SCREEN (46C36)	
	* 4-048-159-11	HOLDER (L), SCREEN (48S35/53S35)	
6	* 4-051-790-02	HOLDER, MIRSD (L)	
7	* 4-049-098-01	CUSHION	
8	* 4-051-789-02	HOLDER, MIRSD (R)	
9	* 4-037-351-01	HOLDER, MIRROR	
10	4-033-775-41	PROTECTOR, MIRROR (53S35)	
11	4-048-181-01	MIRROR (53), REFLECTION (53S35)	
	4-048-182-01	MIRROR (46) (46C36)	
	4-058-545-01	MIRROR (48), REFLECTION (48S35)	
12	* 4-057-610-01	COVER, MIRROR (48S35)	

REF. NO.	PART NO.	DESCRIPTION	REMARK
12	* X-4032-619-1	COVER ASSY, MIRROR (46C36)	13
	* X-4032-620-1	COVER ASSY, MIRROR (53S35)	13
13	4-048-150-01	CAP, HOLE (46C36/53S35)	
14	4-041-164-11	SCREW (4X20), TAPPING	
15	4-057-597-01	GRILLE, SPEAKER (48S35/53S35)	
16	4-057-603-01	BUTTON, MULTI	
17	4-057-604-01	GUIDE, LED / IR	
18	* A-1372-304-A	HA BOARD, COMPLETE (46C36)	
	* A-1372-288-A	HA BOARD, COMPLETE (48S35/53S35)	
19	1-505-378-11	SPEAKER (10CM)	
20	4-048-175-01	FOOT, PLASTIC	
21	4-040-755-01	CASTER (DIA. 30)	
22	* 4-057-844-01	BOARD (53), REAR (53S35)	
	* 4-058-556-01	BOARD (48), REAR (48S35)	
	* 4-058-648-01	BOARD (46), REAR (46C36)	
23	X-4034-456-1	PANEL ASSY, CONTROL (46C36)	24
24	4-057-605-11	DOOR, CONTROL (46C36)	
25	4-843-806-00	STRIKE (46C36)	
26	X-4034-457-1	GRILLE ASSY, SPEAKER (46C36)	
27	4-838-438-00	LATCH (46C36)	
28	4-057-608-01	SKIRT, FRONT (46C36)	
29	4-058-745-01	VELCRO (46C36)	

7-2. COVER (KP-61S35)

● : 7-685-648-79 +BVTP 3X12

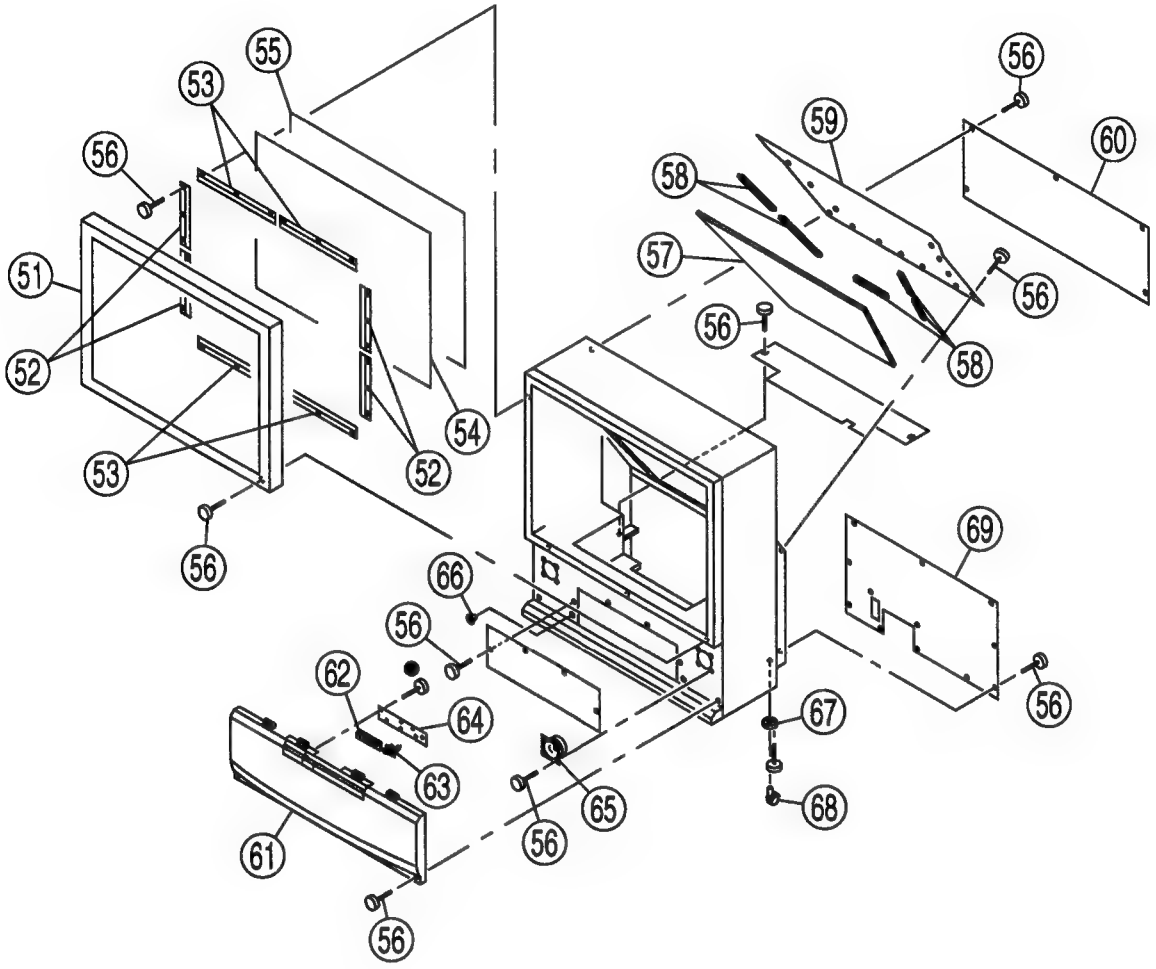

REF. NO.	PART NO.	DESCRIPTION	REMARK
51	X-4032-762-1	FRAME ASSY, SCREEN	
52	* 4-040-122-01	HOLDER (S), SCREEN	
53	* 4-040-120-01	HOLDER (L), SCREEN	
54	4-040-124-11	PLATE (L), DIFFUSION	
55	4-040-123-11	PLATE (F), DIFFUSION	
56	4-041-164-11	SCREW (4X20), TAPPING	
57	4-058-643-01	MIRROR, REFLECTION	
58	* 4-049-098-01	CUSHION	
59	* 4-058-642-01	BOARD, MIRROR	
60	* 4-058-641-01	COVER, TOP REAR	

REF. NO.	PART NO.	DESCRIPTION	REMARK
61	4-057-602-01	GRILLE (61), SPEAKER	
62	4-057-603-01	BUTTON, MULTI	
63	4-057-604-01	GUIDE, LED / IR	
64	* A-1372-288-A	HA BOARD, COMPLETE	
65	1-505-378-11	SPEAKER (10CM)	
66	4-838-438-00	LATCH	
67	4-030-850-01	SOCKET, CASTER	
68	4-040-508-02	CASTER	
69	* 4-058-640-01	BOARD, REAR	

The componants identified by shading and mark ⚠ are critical for safety.
Replace only with part number specified.

Les composants identifies par une trame et une marque ⚠ sont critiques pour la securite.
Ne les remplacer que par une piece portant le numero specifie.

7-3. CHASSIS

● : 7-685-648-79 +BVTP 3X12
▲ : 7-685-661-14 +BVTP 4X12

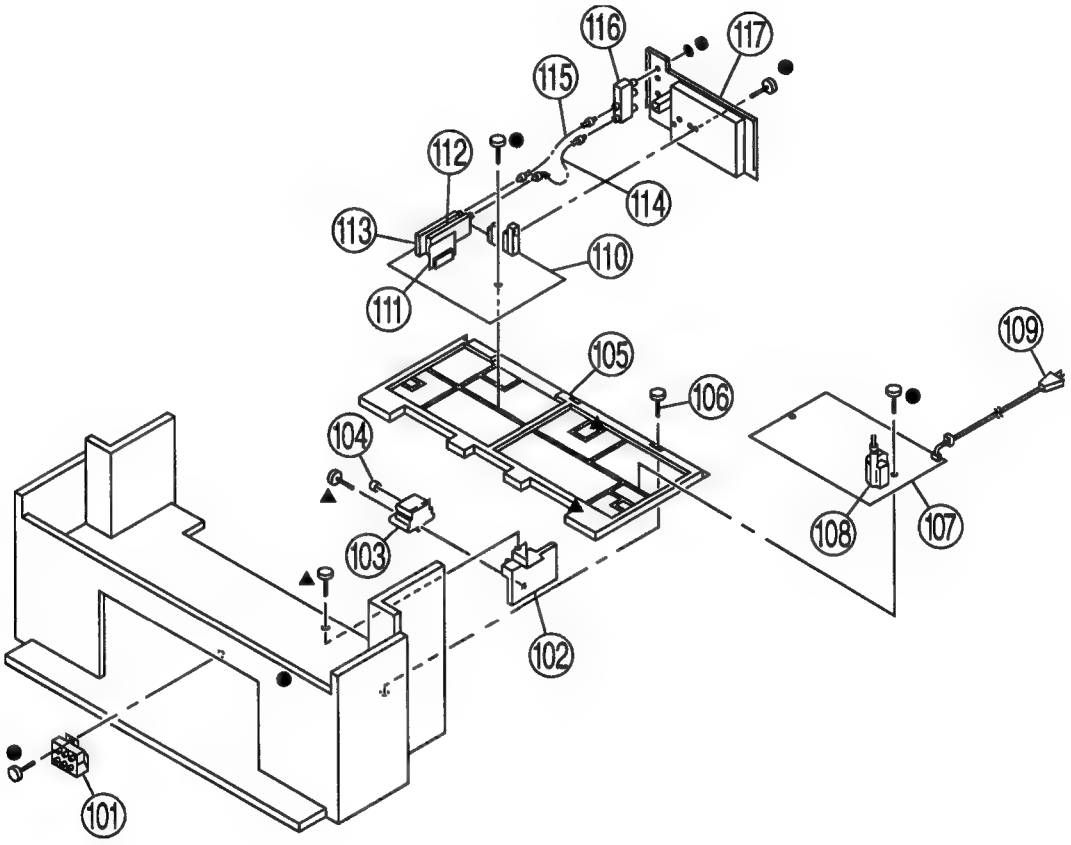

REF. NO.	PART NO.	DESCRIPTION	REMARK
101	⚠1-223-925-12	RESISTOR ASSY (HIGH-VOLTAGE)	
102	* 4-057-596-01	BRACKET, HV	
103	⚠8-598-955-20	BLOCK ASSY, HIGH-VOLTAGE	
104	4-373-137-01	CAP (Z), RUBBER	
105	* 4-057-594-01	BRACKET, MAIN	
106	4-052-894-01	SCREW (4X20), HEAD TAPPING	
107	* A-1316-295-A	G BOARD, COMPLETE (46C36/53S35)	
	* A-1316-304-A	G BOARD, COMPLETE (48S35/61S35)	
108	⚠1-453-238-11	TRANSFORMER ASSY, FLYBACK	(NX-4007//X4A4)
109	⚠1-769-837-11	CORD, POWER(WITH NOISE FILTER)	(7.0A/125V)
110	* A-1297-946-A	A BOARD, COMPLETE (except 46C36)	111
	* A-1298-009-A	A BOARD, COMPLETE (46C36 only)	111
111	* A-1195-103-A	P BOARD, COMPLETE	
112	⚠8-598-339-00	TUNER BTF-LA402	
113	⚠8-598-340-00	TUNER BTF-WA404	
114	* 1-557-056-41	CABLE, P-P	
115	1-556-945-21	CABLE, P-P	
116	8-598-414-00	ANTENNA SWITCH AS-2F	
117	4-057-595-01	TERMINAL BOARD (48S35/53S35/61S35)	
	4-057-595-21	TERMINAL BOARD (46C36)	

The componants identified by shading and mark ⚠ are critical for safety.
Replace only with part number specified.

Les composants identifies par une trame et une marque ⚠ sont critiques pour la securite.
Ne les remplacer que par une piece portant le numero specifie.

7-4. PICTURE TUBE

▲ : 7-685-661-14 +BVTP 4X12

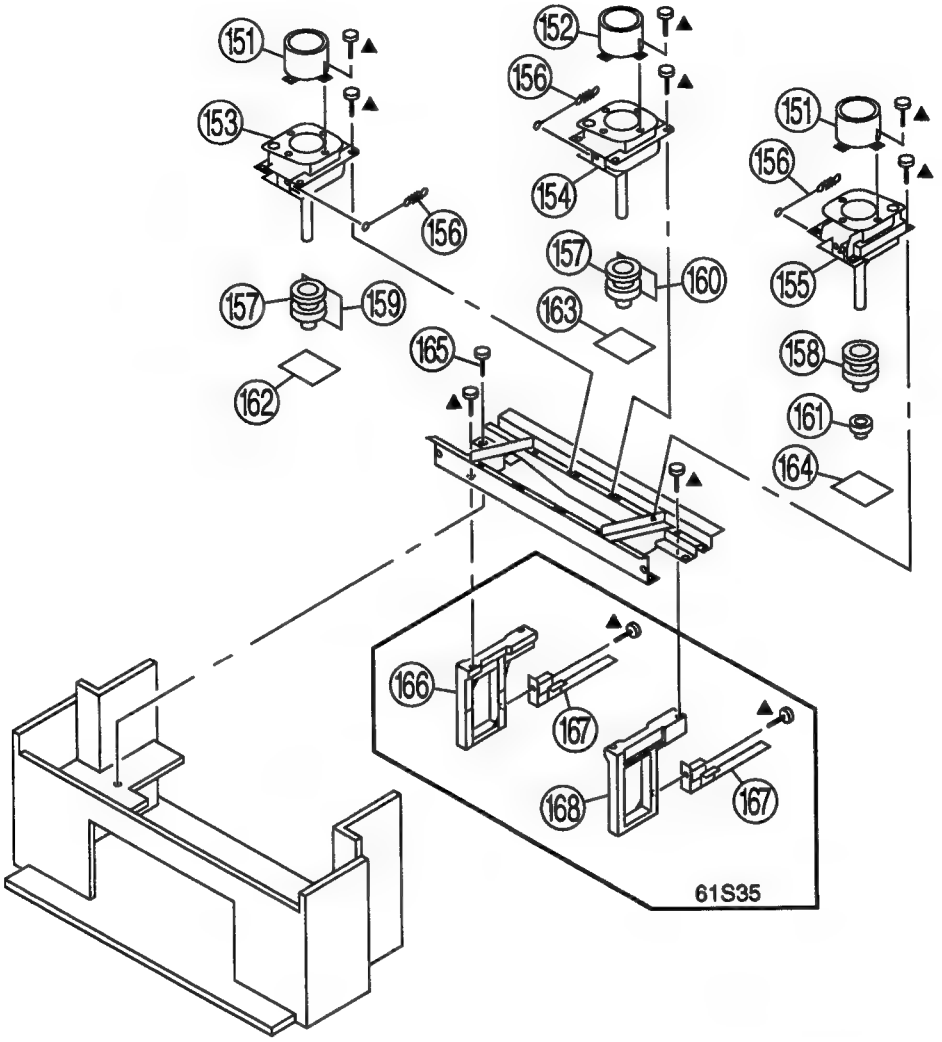

REF. NO.	PART NO.	DESCRIPTION	REMARK
151	4-040-131-01	LENS (LINNIT POINT 6) (61S35)	
	4-056-258-01	LENS (DELTA 78) (46C36/48S35/53S35)	
152	4-040-131-21	LENS (LINNIT POINT 6) (61S35)	
	4-056-258-01	LENS (DELTA 78) (46C36/48S35/53S35)	
153	⚠8-733-496-05	PICTURE TUBE 07MAC2(R) (LONG NECK)	(GA) (46C36)
	⚠8-733-498-05	PICTURE TUBE 07MAC3 (R) (LONG NECK)	(GA) (48S35/53S35)
	⚠8-733-508-05	PICTURE TUBE 07MAC4(R) (61S35)	
154	⚠8-733-518-05	PICTURE TUBE 07MAC2 (G) (GC LENS)	
155	⚠8-733-495-05	PICTURE TUBE 07MAC2(B) (LONG NECK)	(GA) (46C36)
	⚠8-733-497-05	PICTURE TUBE 07MAC3 (B) (LONG NECK)	(GA) (48S35/53S35)

REF. NO.	PART NO.	DESCRIPTION	REMARK
155	⚠8-733-507-05	PICTURE TUBE 07MAC4(B) (61S35)	
156	4-048-142-01	SPRING, TENSION	
157	⚠1-451-454-11	DEFLECTION YOKE (R) (G)	
158	⚠1-451-455-21	DEFLECTION YOKE (B)	
159	* A-1390-682-A	ZR BOARD, COMPLETE	
160	* A-1390-683-A	ZG BOARD, COMPLETE	
161	1-452-909-11	MAGNET ASSY, 4 POLE	
162	* A-1331-667-A	CR BOARD, COMPLETE	
163	* A-1331-668-A	CG BOARD, COMPLETE	
164	* A-1331-669-A	CB BOARD, COMPLETE	
165	4-052-894-01	SCREW (4X20), HEAD TAPPING	
166	4-057-612-01	BOARD (L), SIDE (61S35)	
167	4-058-638-01	STAY, CHASSIS (61S35)	
168	4-057-613-01	BOARD (R), SIDE (61S35)	

SECTION 8
ELECTRICAL PARTS LIST

P

NOTE:

Les composants identifies par une trame et une marque ⚠ sont critiques pour la securite. Ne les remplacer que par une piece portant le numero specifie.

The components identified by shading and mark ⚠ are critical for safety. Replace only with part number specified.

- The components identified by ⧗ in this manual have been carefully factory-selected for each set in order to satisfy regulations regarding X-ray radiation. Should replacement be required, replace only with the value originally used.
- Items marked " * " are not stocked since they are seldom required for routine service. Some delay should be anticipated when ordering these items.
- All variable and adjustable resistors have characteristic curve B, unless otherwise noted.

RESISTORS
- All resistors are in ohms
- F : nonflammable

When indicating parts by reference number, please include the board name.

- CAPACITORS
  PF : μμ F
- There are some cases the reference number on one board overlaps on the other board. Therefore, when ordering parts by the reference number, please include the board name.

REF. NO.	PART NO.	DESCRIPTION				REMARK
	* A-1195-103-A	P BOARD, COMPLETE **********				
		<CAPACITOR>				
C3301	1-163-017-00	CERAMIC CHIP	0.0047MF	10%	50V	
C3302	1-164-346-11	CERAMIC CHIP	1MF		16V	
C3303	1-163-038-91	CERAMIC CHIP	0.1MF		25V	
C3304	1-126-960-11	ELECT	1MF	20%	50V	
C3305	1-163-038-91	CERAMIC CHIP	0.1MF		25V	
C3306	1-126-967-11	ELECT	47MF	20%	16V	
C3307	1-163-038-91	CERAMIC CHIP	0.1MF		25V	
C3308	1-163-231-11	CERAMIC CHIP	15PF	5%	50V	
C3309	1-163-017-00	CERAMIC CHIP	0.0047MF	10%	50V	
C3310	1-164-004-11	CERAMIC CHIP	0.1MF	10%	25V	
C3313	1-163-038-91	CERAMIC CHIP	0.1MF		25V	
C3314	1-163-038-91	CERAMIC CHIP	0.1MF		25V	
C3315	1-164-346-11	CERAMIC CHIP	1MF		16V	
C3319	1-163-031-11	CERAMIC CHIP	0.01MF		50V	
C3320	1-126-960-11	ELECT	1MF	20%	50V	
C3321	1-163-239-11	CERAMIC CHIP	33PF	5%	50V	
C3322	1-163-239-11	CERAMIC CHIP	33PF	5%	50V	
C3323	1-163-031-11	CERAMIC CHIP	0.01MF		50V	
C3324	1-126-967-11	ELECT	47MF	20%	16V	
C3325	1-163-038-91	CERAMIC CHIP	0.1MF		25V	
C3326	1-163-038-91	CERAMIC CHIP	0.1MF		25V	
C3327	1-163-038-91	CERAMIC CHIP	0.1MF		25V	
C3328	1-126-967-11	ELECT	47MF	20%	16V	
C3329	1-126-967-11	ELECT	47MF	20%	16V	
C3330	1-163-031-11	CERAMIC CHIP	0.01MF		50V	
C3331	1-126-967-11	ELECT	47MF	20%	16V	
C3332	1-104-664-11	ELECT	47MF	20%	25V	
C3333	1-164-695-11	CERAMIC CHIP	0.0022MF	5%	50V	
C3334	1-163-031-11	CERAMIC CHIP	0.01MF		50V	
C3335	1-163-038-91	CERAMIC CHIP	0.1MF		25V	
C3336	1-163-038-91	CERAMIC CHIP	0.1MF		25V	
C3337	1-164-005-11	CERAMIC CHIP	0.47MF		25V	
C3338	1-163-141-00	CERAMIC CHIP	0.001MF	5%	50V	
C3340	1-163-031-11	CERAMIC CHIP	0.01MF		50V	
C3346	1-163-251-11	CERAMIC CHIP	100PF	5%	50V	
C3347	1-126-960-11	ELECT	1MF	20%	50V	
C3348	1-126-967-11	ELECT	47MF	20%	16V	
C3349	1-163-121-00	CERAMIC CHIP	150PF	5%	50V	
C3350	1-164-004-11	CERAMIC CHIP	0.1MF	10%	25V	
C3351	1-163-251-11	CERAMIC CHIP	100PF	5%	50V	
		<CONNECTOR>				
CN3301	* 1-764-816-11	CONNECTOR, BOARD TO BOARD 20P				
		<IC>				
IC3301	8-759-366-24	IC TDA8315T/N3A-T				
IC3302	8-759-231-53	IC TA7805S				
IC3303	8-759-361-12	IC SDA9288X				
		<COIL>				
L3301	1-408-413-00	INDUCTOR 22UH				
L3302	1-410-473-11	INDUCTOR 18UH				
L3303	1-408-418-00	INDUCTOR 56UH				
		<TRANSISTOR>				
Q3301	8-729-422-27	TRANSISTOR 2SD601A-QRS-TX				
Q3305	8-729-026-49	TRANSISTOR 2SA1037AK-T146-R				
Q3306	8-729-026-49	TRANSISTOR 2SA1037AK-T146-R				
Q3307	8-729-026-49	TRANSISTOR 2SA1037AK-T146-R				
Q3308	8-729-422-27	TRANSISTOR 2SD601A-QRS-TX				
Q3310	8-729-422-27	TRANSISTOR 2SD601A-QRS-TX				
Q3312	8-729-026-49	TRANSISTOR 2SA1037AK-T146-R				
Q3313	8-729-422-27	TRANSISTOR 2SD601A-QRS-TX				
		<RESISTOR>				
R3301	1-216-075-00	METAL GLAZE	12K	5%	1/10W	
R3302	1-216-043-91	METAL GLAZE	560	5%	1/10W	
R3303	1-216-295-91	CONDUCTOR, CHIP				
R3304	1-216-043-91	METAL GLAZE	560	5%	1/10W	
R3306	1-215-882-00	METAL OXIDE	22	5%	2W	F
R3307	1-216-097-91	METAL GLAZE	100K	5%	1/10W	
R3308	1-216-051-00	METAL GLAZE	1.2K	5%	1/10W	
R3309	1-216-051-00	METAL GLAZE	1.2K	5%	1/10W	
R3310	1-216-689-11	METAL GLAZE	39K	5%	1/10W	
R3311	1-216-689-11	METAL GLAZE	39K	5%	1/10W	
R3312	1-216-037-00	METAL GLAZE	330	5%	1/10W	
R3313	1-216-041-00	METAL GLAZE	470	5%	1/10W	
R3314	1-216-041-00	METAL GLAZE	470	5%	1/10W	
R3315	1-216-041-00	METAL GLAZE	470	5%	1/10W	
R3316	1-216-053-00	METAL GLAZE	1.5K	5%	1/10W	
R3319	1-216-053-00	METAL GLAZE	1.5K	5%	1/10W	
R3321	1-216-053-00	METAL GLAZE	1.5K	5%	1/10W	
R3322	1-216-065-00	METAL GLAZE	4.7K	5%	1/10W	
R3323	1-216-065-00	METAL GLAZE	4.7K	5%	1/10W	
R3324	1-216-065-00	METAL GLAZE	4.7K	5%	1/10W	
R3326	1-216-037-00	METAL GLAZE	330	5%	1/10W	
R3327	1-216-031-00	METAL GLAZE	180	5%	1/10W	
R3328	1-216-037-00	METAL GLAZE	330	5%	1/10W	
R3329	1-216-069-00	METAL GLAZE	6.8K	5%	1/10W	
R3330	1-216-035-00	METAL GLAZE	270	5%	1/10W	
R3331	1-216-073-00	METAL GLAZE	10K	5%	1/10W	
R3332	1-216-041-00	METAL GLAZE	470	5%	1/10W	
R3337	1-216-033-00	METAL GLAZE	220	5%	1/10W	
R3338	1-216-033-00	METAL GLAZE	220	5%	1/10W	
R3339	1-216-041-00	METAL GLAZE	470	5%	1/10W	
R3340	1-216-041-00	METAL GLAZE	470	5%	1/10W	
R3341	1-216-057-00	METAL GLAZE	2.2K	5%	1/10W	
R3342	1-216-057-00	METAL GLAZE	2.2K	5%	1/10W	
R3343	1-216-049-91	METAL GLAZE	1K	5%	1/10W	
R3346	1-216-049-91	METAL GLAZE	1K	5%	1/10W	
R3351	1-216-295-91	CONDUCTOR, CHIP				

P A

REF. NO.	PART NO.	DESCRIPTION			REMARK
R3352	1-216-049-91	METAL GLAZE	1K	5%	1/10W
R3358	1-216-047-91	METAL GLAZE	820	5%	1/10W
R3359	1-216-047-91	METAL GLAZE	820	5%	1/10W
R3360	1-216-053-00	METAL GLAZE	1.5K	5%	1/10W
R3361	1-216-053-00	METAL GLAZE	1.5K	5%	1/10W
R3362	1-216-029-00	METAL GLAZE	150	5%	1/10W
R3363	1-216-031-00	METAL GLAZE	180	5%	1/10W
R3364	1-216-035-00	METAL GLAZE	270	5%	1/10W
R3365	1-216-105-91	METAL GLAZE	220K	5%	1/10W
R3366	1-216-105-91	METAL GLAZE	220K	5%	1/10W
R3367	1-216-095-00	METAL GLAZE	82K	5%	1/10W
R3368	1-216-103-00	METAL GLAZE	180K	5%	1/10W
R3369	1-216-101-00	METAL GLAZE	150K	5%	1/10W
R3370	1-216-041-00	METAL GLAZE	470	5%	1/10W
R3371	1-216-095-00	METAL GLAZE	82K	5%	1/10W
R3372	1-216-041-00	METAL GLAZE	470	5%	1/10W
R3373	1-216-035-00	METAL GLAZE	270	5%	1/10W

<CRYSTAL>

X3301	1-567-505-11	OSCILLATOR, CRYSTAL			
X3302	1-760-095-21	VIBRATOR, CRYSTAL			

****

* A-1297-946-A A BOARD, COMPLETE (except KP-46C36)
****

* A-1298-009-A A BOARD, COMPLETE (KP-46C36 only)
****

4-382-854-11 SCREW (M3X10), P, SW (+)

<CAPACITOR>

C001	1-163-031-11	CERAMIC CHIP	0.01MF		50V
C002	1-126-964-11	ELECT	10MF	20%	50V
C003	1-126-964-11	ELECT	10MF	20%	50V
C004	1-126-933-11	ELECT	100MF	20%	16V
C005	1-126-964-11	ELECT	10MF	20%	50V
C017	1-163-809-11	CERAMIC CHIP	0.047MF	10%	25V
C018	1-163-259-91	CERAMIC CHIP	220PF	5%	50V
C019	1-126-960-11	ELECT	1MF	20%	50V
C021	1-163-243-11	CERAMIC CHIP	47PF	5%	50V
C024	1-164-004-11	CERAMIC CHIP	0.1MF	10%	25V
C025	1-163-031-11	CERAMIC CHIP	0.01MF		50V
C026	1-126-964-11	ELECT	10MF	20%	50V
C027	1-126-935-11	ELECT	470MF	20%	16V
C028	1-126-964-11	ELECT	10MF	20%	50V
C032	1-164-004-11	CERAMIC CHIP	0.1MF	10%	25V
C033	1-163-259-91	CERAMIC CHIP	220PF	5%	50V
C034	1-163-809-11	CERAMIC CHIP	0.047MF	10%	25V
C035	1-104-664-11	ELECT	47MF	20%	25V
C036	1-163-231-11	CERAMIC CHIP	15PF	5%	50V
C037	1-163-237-11	CERAMIC CHIP	27PF	5%	50V
C038	1-126-960-11	ELECT	1MF	20%	50V
C045	1-164-182-11	CERAMIC CHIP	0.0033MF	10%	50V
C046	1-163-031-11	CERAMIC CHIP	0.01MF		50V
C047	1-163-010-11	CERAMIC CHIP	0.0012MF	10%	50V
C048	1-164-005-11	CERAMIC CHIP	0.47MF		25V
C054	1-163-033-91	CERAMIC CHIP	0.022MF		50V
C057	1-163-259-91	CERAMIC CHIP	220PF	5%	50V
C060	1-163-038-91	CERAMIC CHIP	0.1MF		25V
C092	1-163-259-91	CERAMIC CHIP	220PF	5%	50V
C107	1-163-031-11	CERAMIC CHIP	0.01MF		50V
C108	1-104-664-11	ELECT	47MF	20%	25V
C109	1-126-935-11	ELECT	470MF	20%	16V
C110	1-163-231-11	CERAMIC CHIP	15PF	5%	50V
C111	1-163-231-11	CERAMIC CHIP	15PF	5%	50V
C119	1-163-227-11	CERAMIC CHIP	10PF	0.5PF	50V
C120	1-163-227-11	CERAMIC CHIP	10PF	0.5PF	50V
C121	1-163-227-11	CERAMIC CHIP	10PF	0.5PF	50V
C124	1-163-031-11	CERAMIC CHIP	0.01MF		50V
C201	1-126-960-11	ELECT	1MF	20%	50V
C203	1-126-935-11	ELECT	470MF	20%	16V
C204	1-164-004-11	CERAMIC CHIP	0.1MF	10%	25V
C206	1-164-004-11	CERAMIC CHIP	0.1MF	10%	25V
C207	1-164-004-11	CERAMIC CHIP	0.1MF	10%	25V
C208	1-164-004-11	CERAMIC CHIP	0.1MF	10%	25V
C209	1-126-964-11	ELECT	10MF	20%	50V
C210	1-126-964-11	ELECT	10MF	20%	50V
C211	1-126-964-11	ELECT	10MF	20%	50V
C212	1-126-964-11	ELECT	10MF	20%	50V
C213	1-126-964-11	ELECT	10MF	20%	50V
C216	1-126-964-11	ELECT	10MF	20%	50V
C218	1-163-031-11	CERAMIC CHIP	0.01MF		50V
C219	1-126-964-11	ELECT	10MF	20%	50V
C220	1-126-964-11	ELECT	10MF	20%	50V
C221	1-164-004-11	CERAMIC CHIP	0.1MF	10%	25V
C223	1-126-964-11	ELECT	10MF	20%	50V
C224	1-104-664-11	ELECT	47MF	20%	25V
C226	1-126-964-11	ELECT	10MF	20%	50V
C227	1-164-004-11	CERAMIC CHIP	0.1MF	10%	25V
C228	1-104-664-11	ELECT	47MF	20%	25V
C229	1-126-964-11	ELECT	10MF	20%	50V
C230	1-126-964-11	ELECT	10MF	20%	50V
C231	1-126-933-11	ELECT	100MF	20%	16V
C232	1-164-004-11	CERAMIC CHIP	0.1MF	10%	25V
C302	1-126-959-11	ELECT	0.47MF	20%	50V
C303	1-163-031-11	CERAMIC CHIP	0.01MF		50V
C304	1-126-964-11	ELECT	10MF	20%	50V
C305	1-163-231-11	CERAMIC CHIP	15PF	5%	50V
C308	1-164-004-11	CERAMIC CHIP	0.1MF	10%	25V
C309	1-126-933-11	ELECT	100MF	20%	16V
C310	1-163-133-00	CERAMIC CHIP	470PF	5%	50V
C311	1-115-419-11	CERAMIC CHIP	3300PF	5%	25V
C312	1-126-959-11	ELECT	0.47MF	20%	50V
C313	1-137-399-11	FILM	0.1MF	5%	50V
C314	1-137-399-11	FILM	0.1MF	5%	50V
C315	1-137-399-11	FILM	0.1MF	5%	50V
C316	1-164-232-11	CERAMIC CHIP	0.01MF	10%	50V
C317	1-164-232-11	CERAMIC CHIP	0.01MF	10%	50V
C318	1-164-232-11	CERAMIC CHIP	0.01MF	10%	50V
C319	1-164-004-11	CERAMIC CHIP	0.1MF	10%	25V
C320	1-164-004-11	CERAMIC CHIP	0.1MF	10%	25V
C321	1-126-963-11	ELECT	4.7MF	20%	50V
C322	1-130-495-00	MYLAR	0.1MF	5%	50V
C323	1-137-581-11	FILM	0.1MF	5%	100V
C324	1-164-182-11	CERAMIC CHIP	0.0033MF	10%	50V
C325	1-126-959-11	ELECT	0.47MF	20%	50V
C326	1-126-964-11	ELECT	10MF	20%	50V
C327	1-163-141-00	CERAMIC CHIP	0.001MF	5%	50V
C329	1-163-017-00	CERAMIC CHIP	0.0047MF	10%	50V
C330	1-163-263-11	CERAMIC CHIP	330PF	5%	50V
C331	1-126-959-11	ELECT	0.47MF	20%	50V
C332	1-164-232-11	CERAMIC CHIP	0.01MF	10%	50V
C333	1-164-232-11	CERAMIC CHIP	0.01MF	10%	50V
C334	1-163-275-11	CERAMIC CHIP	0.001MF	5%	50V
C335	1-126-935-11	ELECT	470MF	20%	16V
C337	1-126-960-11	ELECT	1MF	20%	50V
C338	1-126-961-11	ELECT	2.2MF	20%	50V
C339	1-126-959-11	ELECT	0.47MF	20%	50V
C342	1-137-399-11	FILM	0.1MF	5%	50V
C344	1-163-251-11	CERAMIC CHIP	100PF	5%	50V
C348	1-126-933-11	ELECT	100MF	20%	16V
C349	1-163-245-11	CERAMIC CHIP	56PF	5%	50V
C351	1-164-004-11	CERAMIC CHIP	0.1MF	10%	25V

A

REF. NO.	PART NO.	DESCRIPTION			REMARK
C401	1-126-964-11	ELECT	10MF	20%	50V
C402	1-126-964-11	ELECT	10MF	20%	50V
C403	1-137-367-11	FILM	0.0033MF	5%	50V
C404	1-137-367-11	FILM	0.0033MF	5%	50V
C405	1-137-399-11	FILM	0.1MF	5%	50V
C406	1-137-399-11	FILM	0.1MF	5%	50V
C407	1-126-960-11	ELECT	1MF	20%	50V
C408	1-137-367-11	FILM	0.0033MF	5%	50V
C409	1-137-367-11	FILM	0.0033MF	5%	50V
C410	1-137-399-11	FILM	0.1MF	5%	50V
C411	1-137-399-11	FILM	0.1MF	5%	50V
C412	1-126-933-11	ELECT	100MF	20%	16V
C413	1-128-551-11	ELECT	22MF	20%	25V
C414	1-163-038-91	CERAMIC CHIP	0.1MF		25V
C415	1-126-964-11	ELECT	10MF	20%	50V
C416	1-126-964-11	ELECT	10MF	20%	50V
C417	1-126-964-11	ELECT	10MF	20%	50V
C418	1-104-664-11	ELECT	47MF	20%	25V
C419	1-126-964-11	ELECT	10MF	20%	50V
C420	1-126-964-11	ELECT	10MF	20%	50V
C422	1-104-664-11	ELECT	47MF	20%	25V
C424	1-126-961-11	ELECT	2.2MF	20%	50V
C425	1-126-935-11	ELECT	470MF	20%	16V
C426	1-126-964-11	ELECT	10MF	20%	50V
C427	1-126-933-11	ELECT	100MF	20%	16V
C428	1-126-969-11	ELECT	220MF	20%	50V
C429	1-126-967-11	ELECT	47MF	20%	50V
C430	1-126-964-11	ELECT	10MF	20%	50V
C431	1-126-969-11	ELECT	220MF	20%	50V
C432	1-136-173-00	FILM	0.47MF	5%	50V
C433	1-137-399-11	FILM	0.1MF	5%	50V
C434	1-128-550-11	ELECT	2200MF	20%	50V
C435	1-137-399-11	FILM	0.1MF	5%	50V
C436	1-126-943-11	ELECT	2200MF	20%	25V
C437	1-126-943-11	ELECT	2200MF	20%	25V
C440	1-126-964-11	ELECT	10MF	20%	50V
C441	1-126-964-11	ELECT	10MF	20%	50V
C1101	1-163-031-11	CERAMIC CHIP	0.01MF		50V
C1102	1-163-031-11	CERAMIC CHIP	0.01MF		50V
C1103	1-126-933-11	ELECT	100MF	20%	16V
C1104	1-164-161-11	CERAMIC CHIP	0.0022MF	10%	50V
C1105	1-126-960-11	ELECT	1MF	20%	50V
C1106	1-126-933-11	ELECT	100MF	20%	16V
C1107	1-104-664-11	ELECT	47MF	20%	25V
C1108	1-126-964-11	ELECT	10MF	20%	50V
C1109	1-126-933-11	ELECT	100MF	20%	16V
C1110	1-164-161-11	CERAMIC CHIP	0.0022MF	10%	50V
C1111	1-126-960-11	ELECT	1MF	20%	50V
C1112	1-163-031-11	CERAMIC CHIP	0.01MF		50V
C1113	1-126-964-11	ELECT	10MF	20%	50V
C1114	1-163-031-11	CERAMIC CHIP	0.01MF		50V
C1115	1-163-031-11	CERAMIC CHIP	0.01MF		50V
C1116	1-163-031-11	CERAMIC CHIP	0.01MF		50V
C1117	1-163-031-11	CERAMIC CHIP	0.01MF		50V
C1118	1-163-031-11	CERAMIC CHIP	0.01MF		50V
C1119	1-126-968-11	ELECT	100MF	20%	50V
C1120	1-126-933-11	ELECT	100MF	20%	16V
C1501	1-163-009-11	CERAMIC CHIP	0.001MF	10%	50V
C1502	1-107-504-11	CERAMIC	10PF	0.5PF	500V
C1503	1-136-177-00	FILM	1MF	5%	50V
C1506	1-126-969-11	ELECT	220MF	20%	50V
C1507	1-163-243-11	CERAMIC CHIP	47PF	5%	50V
C1508	1-137-378-11	FILM	0.22MF	5%	50V
C1509	1-163-251-11	CERAMIC CHIP	100PF	5%	50V
C1510	1-126-942-61	ELECT	1000MF	20%	25V
C1511	1-126-942-61	ELECT	1000MF	20%	25V
C1513	1-163-031-11	CERAMIC CHIP	0.01MF		50V
C1514	1-163-031-11	CERAMIC CHIP	0.01MF		50V

REF. NO.	PART NO.	DESCRIPTION			REMARK
C1517	1-126-964-11	ELECT	10MF	20%	50V
C1518	1-126-933-11	ELECT	100MF	20%	16V
C1519	1-126-933-11	ELECT	100MF	20%	16V
C1520	1-126-964-11	ELECT	10MF	20%	50V
C1521	1-164-161-11	CERAMIC CHIP	0.0022MF	10%	50V
C1522	1-164-004-11	CERAMIC CHIP	0.1MF	10%	25V
C1523	1-163-005-11	CERAMIC CHIP	470PF	10%	50V
C1524	1-137-150-11	MYLAR	0.01MF	10%	100V
C1601	1-126-933-11	ELECT	100MF	20%	16V
C1602	1-126-964-11	ELECT	10MF	20%	50V
C1603	1-126-916-11	ELECT	1000MF	20%	6.3V
C1604	1-126-934-11	ELECT	220MF	20%	16V
C1605	1-163-031-11	CERAMIC CHIP	0.01MF		50V
C1606	1-163-031-11	CERAMIC CHIP	0.01MF		50V
C1607	1-163-031-11	CERAMIC CHIP	0.01MF		50V
C1608	1-163-031-11	CERAMIC CHIP	0.01MF		50V
C1609	1-163-031-11	CERAMIC CHIP	0.01MF		50V
C1610	1-126-933-11	ELECT	100MF	20%	16V
C1611	1-163-031-11	CERAMIC CHIP	0.01MF		50V

<FILTER BLOCK>

CM301	1-466-162-81	FILTER BLOCK, COM (CFB-4)

<CONNECTOR>

CN001	*1-564-507-11	PLUG, CONNECTOR 4P
CN002	*1-564-511-11	PLUG, CONNECTOR 8P
CN003	*1-774-183-11	CONNECTOR, BOARD TOBOARD10P
CN004	1-573-979-21	CONNECTOR, BOARD TO BOARD 11P
CN301	*1-774-183-11	CONNECTOR, BOARD TOBOARD10P
CN302	*1-564-508-11	PLUG, CONNECTOR 5P
CN303	*1-564-512-11	PLUG, CONNECTOR 9P
CN305	1-573-298-21	CONNECTOR, BOARD TO BOARD 20P
CN401	*1-564-507-11	PLUG, CONNECTOR 4P
CN402	*1-564-506-11	PLUG, CONNECTOR 3P (46C36 only)
CN1101	*1-564-514-11	PLUG, CONNECTOR 11P (46C36 only)
CN1501	*1-564-506-11	PLUG, CONNECTOR 3P
CN1601	*1-774-183-11	CONNECTOR, BOARD TOBOARD10P
CN1602	*1-774-183-11	CONNECTOR, BOARD TOBOARD10P

<DIODE>

D001	8-719-991-33	DIODE 1SS133T-77
D002	8-719-991-33	DIODE 1SS133T-77
D003	8-719-991-33	DIODE 1SS133T-77
D004	8-719-991-33	DIODE 1SS133T-77
D007	8-719-109-89	DIODE RD5.6ESB2
D010	8-719-109-89	DIODE RD5.6ESB2
D202	8-719-110-17	DIODE RD10ESB2
D203	8-719-109-89	DIODE RD5.6ESB2
D206	8-719-977-28	DIODE DTZ10B
D207	8-719-977-28	DIODE DTZ10B
D208	8-719-977-28	DIODE DTZ10B
D209	8-719-977-28	DIODE DTZ10B
D210	8-719-977-28	DIODE DTZ10B
D211	8-719-977-28	DIODE DTZ10B
D212	8-719-977-28	DIODE DTZ10B
D213	8-719-977-28	DIODE DTZ10B
D214	8-719-110-17	DIODE RD10ESB2
D215	8-719-110-17	DIODE RD10ESB2
D216	8-719-110-17	DIODE RD10ESB2
D217	8-719-110-17	DIODE RD10ESB2
D218	8-719-110-17	DIODE RD10ESB2
D219	8-719-110-17	DIODE RD10ESB2
D220	8-719-110-17	DIODE RD10ESB2
D221	8-719-110-17	DIODE RD10ESB2
D222	8-719-110-17	DIODE RD10ESB2
D225	8-719-110-17	DIODE RD10ESB2

A

Les composants identifies par une trame et une marque ⚠ sont critiques pour la securite. Ne les remplacer que par une piece portant le numero specifie.

The componants identified by shading and mark ⚠ are critical for safety. Replace only with part number specified.

REF. NO.	PART NO.	DESCRIPTION	REMARK
D226	8-719-110-17	DIODE RD10ESB2	
D232	8-719-982-26	DIODE MTZJ-33B	
D236	8-719-110-17	DIODE RD10ESB2	
D237	8-719-110-17	DIODE RD10ESB2	
D238	8-719-110-17	DIODE RD10ESB2	
D239	8-719-991-33	DIODE 1SS133T-77	
D240	8-719-991-33	DIODE 1SS133T-77	
D241	8-719-991-33	DIODE 1SS133T-77	
D303	8-719-991-33	DIODE 1SS133T-77	
D305	8-719-110-17	DIODE RD10ESB2	
D401	8-719-991-33	DIODE 1SS133T-77	
D402	8-719-991-33	DIODE 1SS133T-77	
D403	8-719-982-26	DIODE MTZJ-33B	
D405	8-719-991-33	DIODE 1SS133T-77	
D406	8-719-991-33	DIODE 1SS133T-77	
D408	8-719-991-33	DIODE 1SS133T-77	
D410	8-719-982-26	DIODE MTZJ-33B	
D1101	8-719-982-26	DIODE MTZJ-33B	
D1102	8-719-977-28	DIODE DTZ10B (46C36 only)	
D1103	8-719-977-28	DIODE DTZ10B (46C36 only)	
D1104	8-719-977-28	DIODE DTZ10B (46C36 only)	
D1105	8-719-977-28	DIODE DTZ10B (46C36 only)	
D1106	8-719-977-28	DIODE DTZ10B (46C36 only)	
D1107	8-719-977-28	DIODE DTZ10B (46C36 only)	
D1501	8-719-109-89	DIODE RD5.6ESB2	
D1502	8-719-908-03	DIODE GP08D	
		<FERRITE BEAD>	
FB1102	1-414-135-11	INDUCTOR CHIP 0UH	
		<IC>	
IC001	8-752-874-82	IC CXP85856-008S	
IC002	8-752-861-57	IC CXP85112B-613S	
IC003	8-759-352-91	IC PST9143NL	
IC004	8-759-352-91	IC PST9143NL	
IC007	8-759-518-23	IC X24C04S8	
IC201	8-759-366-78	IC MM1313AD	
IC301	⚠8-752-076-76	IC CXA2025AS	
IC401	8-759-369-39	IC BH3856FS-E2	
IC402	8-759-100-96	IC uPC4558G2	
IC403	8-759-089-13	IC TDA7262	
IC1501	8-759-192-71	IC STV9379	
IC1502	8-759-251-31	IC CA0007AM	
IC1601	8-759-198-03	IC PQ09RF21	
IC1602	8-759-231-53	IC TA7805S	
		<JACK>	
J203	1-507-667-00	JACK, MIC	
J205	1-774-750-11	JACK BLOCK, PIN	
J206	1-774-749-11	JACK BLOCK, PIN	
J208	1-774-749-11	JACK BLOCK, PIN	
J209	1-774-751-11	TERMINAL BLOCK, S	
		<COIL>	
L002	1-410-482-31	INDUCTOR 100UH	
L003	1-410-482-31	INDUCTOR 100UH	
L004	1-216-295-91	CONDUCTOR, CHIP	
L005	1-216-295-91	CONDUCTOR, CHIP	
L006	1-410-470-11	INDUCTOR 10UH	
L007	1-410-482-31	INDUCTOR 100UH	
L201	1-410-478-11	INDUCTOR 47UH	
L302	1-410-482-31	INDUCTOR 100UH	
L303	1-410-470-11	INDUCTOR 10UH	
L1101	1-410-478-11	INDUCTOR 47UH	
L1103	1-410-478-11	INDUCTOR 47UH	
L1104	1-410-478-11	INDUCTOR 47UH	
L1105	1-410-470-11	INDUCTOR 10UH	
L1106	1-410-478-11	INDUCTOR 47UH	
L1501	1-412-524-11	INDUCTOR 8.2UH	
L1502	1-412-533-21	INDUCTOR 47UH	
L1503	1-412-533-21	INDUCTOR 47UH	
		<NEON LAMP>	
NL1501	1-519-108-99	LAMP, NEON	
		<IC LINK>	
PS401	1-532-984-11	LINK, IC (2A/90V)	
		<TRANSISTOR>	
Q001	8-729-422-27	TRANSISTOR 2SD601A-QRS-TX	
Q002	8-729-027-38	TRANSISTOR DTA144EKA-T146	
Q003	8-729-027-38	TRANSISTOR DTA144EKA-T146	
Q004	8-729-216-22	TRANSISTOR 2SA1162-G	
Q005	8-729-216-22	TRANSISTOR 2SA1162-G	
Q006	8-729-027-38	TRANSISTOR DTA144EKA-T146	
Q007	8-729-027-59	TRANSISTOR DTC144EKA-T146	
Q008	8-729-422-27	TRANSISTOR 2SD601A-QRS-TX	
Q009	8-729-027-38	TRANSISTOR DTA144EKA-T146	
Q013	8-729-422-27	TRANSISTOR 2SD601A-QRS-TX	
Q015	8-729-422-27	TRANSISTOR 2SD601A-QRS-TX	
Q016	8-729-422-27	TRANSISTOR 2SD601A-QRS-TX	
Q017	8-729-422-27	TRANSISTOR 2SD601A-QRS-TX	
Q201	8-729-422-27	TRANSISTOR 2SD601A-QRS-TX	
Q206	8-729-027-56	TRANSISTOR DTC143TKA-T146	
Q207	8-729-027-59	TRANSISTOR DTC144EKA-T146	
Q209	8-729-027-56	TRANSISTOR DTC143TKA-T146	
Q213	8-729-216-22	TRANSISTOR 2SA1162-G	
Q214	8-729-216-22	TRANSISTOR 2SA1162-G	
Q216	8-729-027-56	TRANSISTOR DTC143TKA-T146	
Q217	8-729-027-56	TRANSISTOR DTC143TKA-T146	
Q218	8-729-422-27	TRANSISTOR 2SD601A-QRS-TX	
Q219	8-729-422-27	TRANSISTOR 2SD601A-QRS-TX	
Q220	8-729-422-27	TRANSISTOR 2SD601A-QRS-TX	
Q226	8-729-422-27	TRANSISTOR 2SD601A-QRS-TX	
Q301	8-729-216-22	TRANSISTOR 2SA1162-G	
Q302	8-729-216-22	TRANSISTOR 2SA1162-G	
Q303	8-729-422-27	TRANSISTOR 2SD601A-QRS-TX	
Q304	8-729-422-27	TRANSISTOR 2SD601A-QRS-TX	
Q305	8-729-422-27	TRANSISTOR 2SD601A-QRS-TX	
Q306	8-729-216-22	TRANSISTOR 2SA1162-G	
Q307	8-729-422-27	TRANSISTOR 2SD601A-QRS-TX	
Q308	8-729-216-22	TRANSISTOR 2SA1162-G	
Q311	8-729-422-27	TRANSISTOR 2SD601A-QRS-TX	
Q312	8-729-422-27	TRANSISTOR 2SD601A-QRS-TX	
Q313	8-729-422-27	TRANSISTOR 2SD601A-QRS-TX	
Q314	8-729-422-27	TRANSISTOR 2SD601A-QRS-TX	
Q402	8-729-027-59	TRANSISTOR DTC144EKA-T146	
Q403	8-729-027-38	TRANSISTOR DTA144EKA-T146	
Q405	8-729-216-22	TRANSISTOR 2SA1162-G	
Q406	8-729-216-22	TRANSISTOR 2SA1162-G	
Q408	8-729-027-56	TRANSISTOR DTC143TKA-T146	
Q409	8-729-027-56	TRANSISTOR DTC143TKA-T146	
Q410	8-729-027-56	TRANSISTOR DTC143TKA-T146	
Q411	8-729-027-56	TRANSISTOR DTC143TKA-T146	
Q1101	8-729-027-59	TRANSISTOR DTC144EKA-T146	
Q1501	8-729-422-27	TRANSISTOR 2SD601A-QRS-TX	
Q2105	8-729-422-27	TRANSISTOR 2SD601A-QRS-TX	
Q2106	8-729-422-27	TRANSISTOR 2SD601A-QRS-TX	

A

REF. NO.	PART NO.	DESCRIPTION			REMARK
		<RESISTOR>			
R003	1-216-295-91	CONDUCTOR, CHIP			
R004	1-216-033-00	METAL GLAZE	220	5%	1/10W
R005	1-216-033-00	METAL GLAZE	220	5%	1/10W
R006	1-216-033-00	METAL GLAZE	220	5%	1/10W
R007	1-216-081-00	METAL GLAZE	22K	5%	1/10W
R008	1-216-073-00	METAL GLAZE	10K	5%	1/10W
R009	1-216-033-00	METAL GLAZE	220	5%	1/10W
R010	1-216-033-00	METAL GLAZE	220	5%	1/10W
R011	1-216-033-00	METAL GLAZE	220	5%	1/10W
R012	1-216-033-00	METAL GLAZE	220	5%	1/10W
R013	1-216-033-00	METAL GLAZE	220	5%	1/10W
R014	1-216-033-00	METAL GLAZE	220	5%	1/10W
R015	1-216-025-91	METAL GLAZE	100	5%	1/10W
R016	1-216-025-91	METAL GLAZE	100	5%	1/10W
R017	1-216-065-00	METAL GLAZE	4.7K	5%	1/10W
R018	1-216-065-00	METAL GLAZE	4.7K	5%	1/10W
R019	1-216-097-91	METAL GLAZE	100K	5%	1/10W
R020	1-216-057-00	METAL GLAZE	2.2K	5%	1/10W
R021	1-216-089-91	METAL GLAZE	47K	5%	1/10W
R023	1-216-065-00	METAL GLAZE	4.7K	5%	1/10W
R024	1-216-121-91	METAL GLAZE	1M	5%	1/10W
R025	1-216-097-91	METAL GLAZE	100K	5%	1/10W
R026	1-216-033-00	METAL GLAZE	220	5%	1/10W
R027	1-216-065-00	METAL GLAZE	4.7K	5%	1/10W
R028	1-216-065-00	METAL GLAZE	4.7K	5%	1/10W
R030	1-216-073-00	METAL GLAZE	10K	5%	1/10W
R031	1-216-065-00	METAL GLAZE	4.7K	5%	1/10W
R032	1-216-073-00	METAL GLAZE	10K	5%	1/10W
R033	1-216-065-00	METAL GLAZE	4.7K	5%	1/10W
R034	1-216-073-00	METAL GLAZE	10K	5%	1/10W
R035	1-216-065-00	METAL GLAZE	4.7K	5%	1/10W
R036	1-216-033-00	METAL GLAZE	220	5%	1/10W
R037	1-216-033-00	METAL GLAZE	220	5%	1/10W
R038	1-216-089-91	METAL GLAZE	47K	5%	1/10W
R039	1-216-089-91	METAL GLAZE	47K	5%	1/10W
R040	1-216-065-00	METAL GLAZE	4.7K	5%	1/10W
R041	1-216-025-91	METAL GLAZE	100	5%	1/10W
R042	1-216-089-91	METAL GLAZE	47K	5%	1/10W
R043	1-216-065-00	METAL GLAZE	4.7K	5%	1/10W
R044	1-216-073-00	METAL GLAZE	10K	5%	1/10W
R045	1-216-073-00	METAL GLAZE	10K	5%	1/10W
R046	1-216-049-91	METAL GLAZE	1K	5%	1/10W
R047	1-216-057-00	METAL GLAZE	2.2K	5%	1/10W
R048	1-216-065-00	METAL GLAZE	4.7K	5%	1/10W
R049	1-216-089-91	METAL GLAZE	47K	5%	1/10W
R050	1-216-073-00	METAL GLAZE	10K	5%	1/10W
R051	1-247-807-31	CARBON	100	5%	1/4W
R052	1-247-815-91	CARBON	220	5%	1/4W
R053	1-216-049-91	METAL GLAZE	1K	5%	1/10W
R054	1-216-033-00	METAL GLAZE	220	5%	1/10W
R055	1-216-033-00	METAL GLAZE	220	5%	1/10W
R056	1-216-121-91	METAL GLAZE	1M	5%	1/10W
R057	1-216-049-91	METAL GLAZE	1K	5%	1/10W
R058	1-216-049-91	METAL GLAZE	1K	5%	1/10W
R059	1-216-033-00	METAL GLAZE	220	5%	1/10W
R060	1-216-033-00	METAL GLAZE	220	5%	1/10W
R061	1-216-049-91	METAL GLAZE	1K	5%	1/10W
R063	1-216-073-00	METAL GLAZE	10K	5%	1/10W
R064	1-216-049-91	METAL GLAZE	1K	5%	1/10W
R065	1-216-049-91	METAL GLAZE	1K	5%	1/10W
R066	1-216-049-91	METAL GLAZE	1K	5%	1/10W
R067	1-216-033-00	METAL GLAZE	220	5%	1/10W
R068	1-216-033-00	METAL GLAZE	220	5%	1/10W
R070	1-216-033-00	METAL GLAZE	220	5%	1/10W
R071	1-216-033-00	METAL GLAZE	220	5%	1/10W
R072	1-216-033-00	METAL GLAZE	220	5%	1/10W
R073	1-216-033-00	METAL GLAZE	220	5%	1/10W
R074	1-216-049-91	METAL GLAZE	1K	5%	1/10W
R075	1-216-049-91	METAL GLAZE	1K	5%	1/10W
R076	1-216-033-00	METAL GLAZE	220	5%	1/10W
R077	1-216-121-91	METAL GLAZE	1M	5%	1/10W
R078	1-216-097-91	METAL GLAZE	100K	5%	1/10W
R080	1-216-073-00	METAL GLAZE	10K	5%	1/10W
R081	1-216-033-00	METAL GLAZE	220	5%	1/10W
R084	1-216-073-00	METAL GLAZE	10K	5%	1/10W
R085	1-216-097-91	METAL GLAZE	100K	5%	1/10W
R086	1-216-033-00	METAL GLAZE	220	5%	1/10W
R087	1-216-073-00	METAL GLAZE	10K	5%	1/10W
R088	1-216-065-00	METAL GLAZE	4.7K	5%	1/10W
R090	1-216-065-00	METAL GLAZE	4.7K	5%	1/10W
R091	1-216-057-00	METAL GLAZE	2.2K	5%	1/10W
R092	1-216-057-00	METAL GLAZE	2.2K	5%	1/10W
R099	1-216-037-00	METAL GLAZE	330	5%	1/10W
R111	1-216-033-00	METAL GLAZE	220	5%	1/10W
R112	1-216-033-00	METAL GLAZE	220	5%	1/10W
R113	1-216-033-00	METAL GLAZE	220	5%	1/10W
R115	1-216-033-00	METAL GLAZE	220	5%	1/10W
R117	1-216-033-00	METAL GLAZE	220	5%	1/10W
R118	1-216-033-00	METAL GLAZE	220	5%	1/10W
R119	1-216-033-00	METAL GLAZE	220	5%	1/10W
R120	1-216-033-00	METAL GLAZE	220	5%	1/10W
R121	1-216-033-00	METAL GLAZE	220	5%	1/10W
R122	1-216-033-00	METAL GLAZE	220	5%	1/10W
R123	1-216-033-00	METAL GLAZE	220	5%	1/10W
R124	1-216-033-00	METAL GLAZE	220	5%	1/10W
R125	1-216-033-00	METAL GLAZE	220	5%	1/10W
R127	1-216-033-00	METAL GLAZE	220	5%	1/10W
R128	1-216-033-00	METAL GLAZE	220	5%	1/10W
R131	1-216-065-00	METAL GLAZE	4.7K	5%	1/10W
R132	1-216-065-00	METAL GLAZE	4.7K	5%	1/10W
R133	1-216-065-00	METAL GLAZE	4.7K	5%	1/10W
R147	1-216-057-00	METAL GLAZE	2.2K	5%	1/10W
R148	1-216-057-00	METAL GLAZE	2.2K	5%	1/10W
R149	1-216-057-00	METAL GLAZE	2.2K	5%	1/10W
R154	1-216-025-91	METAL GLAZE	100	5%	1/10W
R155	1-216-025-91	METAL GLAZE	100	5%	1/10W
R156	1-216-113-00	METAL GLAZE	470K	5%	1/10W
R157	1-216-017-91	METAL GLAZE	47	5%	1/10W
R158	1-216-113-00	METAL GLAZE	470K	5%	1/10W
R159	1-216-017-91	METAL GLAZE	47	5%	1/10W
R160	1-216-113-00	METAL GLAZE	470K	5%	1/10W
R161	1-216-017-91	METAL GLAZE	47	5%	1/10W
R163	1-216-033-00	METAL GLAZE	220	5%	1/10W
R164	1-216-033-00	METAL GLAZE	220	5%	1/10W
R165	1-216-033-00	METAL GLAZE	220	5%	1/10W
R171	1-216-035-00	METAL GLAZE	270	5%	1/10W
R172	1-216-035-00	METAL GLAZE	270	5%	1/10W
R173	1-216-035-00	METAL GLAZE	270	5%	1/10W
R204	1-249-377-11	CARBON	0.47	5%	1/4W F
R206	1-216-022-00	METAL GLAZE	75	5%	1/10W
R213	1-216-113-00	METAL GLAZE	470K	5%	1/10W
R214	1-216-113-00	METAL GLAZE	470K	5%	1/10W
R215	1-216-113-00	METAL GLAZE	470K	5%	1/10W
R216	1-216-113-00	METAL GLAZE	470K	5%	1/10W
R217	1-216-113-00	METAL GLAZE	470K	5%	1/10W
R218	1-216-022-00	METAL GLAZE	75	5%	1/10W
R219	1-216-113-00	METAL GLAZE	470K	5%	1/10W
R220	1-216-113-00	METAL GLAZE	470K	5%	1/10W
R221	1-216-022-00	METAL GLAZE	75	5%	1/10W
R222	1-216-022-00	METAL GLAZE	75	5%	1/10W
R223	1-216-022-00	METAL GLAZE	75	5%	1/10W
R224	1-216-017-91	METAL GLAZE	47	5%	1/10W
R225	1-216-057-00	METAL GLAZE	2.2K	5%	1/10W
R227	1-216-019-00	METAL GLAZE	56	5%	1/10W
R229	1-216-049-91	METAL GLAZE	1K	5%	1/10W

A

REF. NO.	PART NO.	DESCRIPTION			REMARK
R230	1-216-113-00	METAL GLAZE 470K	5%	1/10W	
R231	1-216-113-00	METAL GLAZE 470K	5%	1/10W	
R235	1-216-041-00	METAL GLAZE 470	5%	1/10W	
R236	1-216-041-00	METAL GLAZE 470	5%	1/10W	
R241	1-216-041-00	METAL GLAZE 470	5%	1/10W	
R245	1-216-041-00	METAL GLAZE 470	5%	1/10W	
R255	1-216-073-00	METAL GLAZE 10K	5%	1/10W	
R258	1-216-089-91	METAL GLAZE 47K	5%	1/10W	
R260	1-216-073-00	METAL GLAZE 10K	5%	1/10W	
R261	1-216-065-00	METAL GLAZE 4.7K	5%	1/10W	
R262	1-216-095-00	METAL GLAZE 82K	5%	1/10W	(46C36 only)
R263	1-216-095-00	METAL GLAZE 82K	5%	1/10W	
R264	1-216-089-91	METAL GLAZE 47K	5%	1/10W	
R265	1-216-097-91	METAL GLAZE 100K	5%	1/10W	
R266	1-216-057-00	METAL GLAZE 2.2K	5%	1/10W	
R268	1-216-105-91	METAL GLAZE 220K	5%	1/10W	
R274	1-216-019-00	METAL GLAZE 56	5%	1/10W	
R275	1-216-033-00	METAL GLAZE 220	5%	1/10W	
R276	1-216-033-00	METAL GLAZE 220	5%	1/10W	
R277	1-216-025-91	METAL GLAZE 100	5%	1/10W	
R278	1-216-025-91	METAL GLAZE 100	5%	1/10W	
R279	1-216-025-91	METAL GLAZE 100	5%	1/10W	
R280	1-216-041-00	METAL GLAZE 470	5%	1/10W	(46C36 only)
R281	1-216-041-00	METAL GLAZE 470	5%	1/10W	(46C36 only)
R282	1-216-041-00	METAL GLAZE 470	5%	1/10W	(46C36 only)
R283	1-216-041-00	METAL GLAZE 470	5%	1/10W	(46C36 only)
R284	1-216-041-00	METAL GLAZE 470	5%	1/10W	(46C36 only)
R285	1-216-041-00	METAL GLAZE 470	5%	1/10W	(46C36 only)
R286	1-216-025-91	METAL GLAZE 100	5%	1/10W	
R287	1-216-025-91	METAL GLAZE 100	5%	1/10W	
R288	1-216-025-91	METAL GLAZE 100	5%	1/10W	
R289	1-216-025-91	METAL GLAZE 100	5%	1/10W	
R290	1-216-025-91	METAL GLAZE 100	5%	1/10W	
R291	1-216-025-91	METAL GLAZE 100	5%	1/10W	
R294	1-216-043-91	METAL GLAZE 560	5%	1/10W	
R295	1-216-073-00	METAL GLAZE 10K	5%	1/10W	
R296	1-216-025-91	METAL GLAZE 100	5%	1/10W	
R297	1-216-093-00	METAL GLAZE 68K	5%	1/10W	
R299	1-216-041-00	METAL GLAZE 470	5%	1/10W	
R301	1-216-041-00	METAL GLAZE 470	5%	1/10W	
R302	1-216-049-91	METAL GLAZE 1K	5%	1/10W	
R303	1-216-049-91	METAL GLAZE 1K	5%	1/10W	
R304	1-216-049-91	METAL GLAZE 1K	5%	1/10W	
R305	1-216-033-00	METAL GLAZE 220	5%	1/10W	
R306	1-216-041-00	METAL GLAZE 470	5%	1/10W	
R307	1-216-049-91	METAL GLAZE 1K	5%	1/10W	
R308	1-216-017-91	METAL GLAZE 47	5%	1/10W	
R309	1-216-017-91	METAL GLAZE 47	5%	1/10W	
R310	1-216-017-91	METAL GLAZE 47	5%	1/10W	
R314	1-216-033-00	METAL GLAZE 220	5%	1/10W	
R315	1-216-033-00	METAL GLAZE 220	5%	1/10W	
R319	1-216-033-00	METAL GLAZE 220	5%	1/10W	
R320	1-216-033-00	METAL GLAZE 220	5%	1/10W	
R322	1-216-077-00	METAL GLAZE 15K	5%	1/10W	
R323	1-216-025-91	METAL GLAZE 100	5%	1/10W	
R324	1-216-025-91	METAL GLAZE 100	5%	1/10W	
R325	1-216-025-91	METAL GLAZE 100	5%	1/10W	
R326	1-208-786-11	METAL GLAZE 1.5K	0.50%	1/10W	
R327	1-216-049-91	METAL GLAZE 1K	5%	1/10W	
R328	1-216-049-91	METAL GLAZE 1K	5%	1/10W	
R330	1-216-025-91	METAL GLAZE 100	5%	1/10W	
R331	1-216-025-91	METAL GLAZE 100	5%	1/10W	
R332	1-216-035-00	METAL GLAZE 270	5%	1/10W	
R333	1-208-810-11	METAL GLAZE 15K	0.50%	1/10W	
R334	1-216-043-91	METAL GLAZE 560	5%	1/10W	
R335	1-216-033-00	METAL GLAZE 220	5%	1/10W	
R337	1-216-033-00	METAL GLAZE 220	5%	1/10W	
R338	1-216-033-00	METAL GLAZE 220	5%	1/10W	
R339	1-216-033-00	METAL GLAZE 220	5%	1/10W	
R340	1-216-025-91	METAL GLAZE 100	5%	1/10W	
R342	1-216-025-91	METAL GLAZE 100	5%	1/10W	
R343	1-216-073-00	METAL GLAZE 10K	5%	1/10W	
R344	1-216-067-00	METAL GLAZE 5.6K	5%	1/10W	
R345	1-216-109-00	METAL GLAZE 330K	5%	1/10W	
R346	1-216-053-00	METAL GLAZE 1.5K	5%	1/10W	
R347	1-216-049-91	METAL GLAZE 1K	5%	1/10W	
R348	1-216-133-00	METAL GLAZE 3.3M	5%	1/10W	
R349	1-216-049-91	METAL GLAZE 1K	5%	1/10W	
R350	1-216-049-91	METAL GLAZE 1K	5%	1/10W	
R351	1-216-061-00	METAL GLAZE 3.3K	5%	1/10W	
R352	1-216-059-00	METAL GLAZE 2.7K	5%	1/10W	
R353	1-216-059-00	METAL GLAZE 2.7K	5%	1/10W	
R354	1-216-073-00	METAL GLAZE 10K	5%	1/10W	
R355	1-216-089-91	METAL GLAZE 47K	5%	1/10W	
R356	1-216-025-91	METAL GLAZE 100	5%	1/10W	
R357	1-216-049-91	METAL GLAZE 1K	5%	1/10W	
R358	1-216-049-91	METAL GLAZE 1K	5%	1/10W	
R359	1-216-049-91	METAL GLAZE 1K	5%	1/10W	
R360	1-216-065-00	METAL GLAZE 4.7K	5%	1/10W	
R361	1-216-041-00	METAL GLAZE 470	5%	1/10W	
R362	1-216-049-91	METAL GLAZE 1K	5%	1/10W	
R363	1-216-077-00	METAL GLAZE 15K	5%	1/10W	
R364	1-208-783-11	METAL GLAZE 1.1K	0.50%	1/10W	
R365	1-216-081-00	METAL GLAZE 22K	5%	1/10W	
R366	1-216-017-91	METAL GLAZE 47	5%	1/10W	
R367	1-216-081-00	METAL GLAZE 22K	5%	1/10W	
R368	1-216-065-00	METAL GLAZE 4.7K	5%	1/10W	
R369	1-216-073-00	METAL GLAZE 10K	5%	1/10W	
R370	1-216-083-00	METAL GLAZE 27K	5%	1/10W	
R371	1-216-077-00	METAL GLAZE 15K	5%	1/10W	
R372	1-216-065-00	METAL GLAZE 4.7K	5%	1/10W	
R373	1-216-079-00	METAL GLAZE 18K	5%	1/10W	
R374	1-216-049-91	METAL GLAZE 1K	5%	1/10W	
R375	1-216-101-00	METAL GLAZE 150K	5%	1/10W	
R376	1-216-097-91	METAL GLAZE 100K	5%	1/10W	
R377	1-216-073-00	METAL GLAZE 10K	5%	1/10W	
R378	1-216-057-00	METAL GLAZE 2.2K	5%	1/10W	
R379	1-216-073-00	METAL GLAZE 10K	5%	1/10W	
R380	1-216-089-91	METAL GLAZE 47K	5%	1/10W	
R381	1-216-097-91	METAL GLAZE 100K	5%	1/10W	
R384	1-249-377-11	CARBON 0.47	5%	1/4W	F
R401	1-249-377-11	CARBON 0.47	5%	1/4W	F
R406	1-216-073-00	METAL GLAZE 10K	5%	1/10W	
R407	1-216-025-91	METAL GLAZE 100	5%	1/10W	
R408	1-216-025-91	METAL GLAZE 100	5%	1/10W	
R412	1-216-073-00	METAL GLAZE 10K	5%	1/10W	
R413	1-216-073-00	METAL GLAZE 10K	5%	1/10W	
R414	1-216-073-00	METAL GLAZE 10K	5%	1/10W	
R415	1-216-025-91	METAL GLAZE 100	5%	1/10W	
R416	1-216-073-00	METAL GLAZE 10K	5%	1/10W	
R418	1-216-025-91	METAL GLAZE 100	5%	1/10W	
R423	1-216-025-91	METAL GLAZE 100	5%	1/10W	
R424	1-216-089-91	METAL GLAZE 47K	5%	1/10W	
R425	1-216-041-00	METAL GLAZE 470	5%	1/10W	
R427	1-216-053-00	METAL GLAZE 1.5K	5%	1/10W	
R428	1-216-049-91	METAL GLAZE 1K	5%	1/10W	
R429	1-216-049-91	METAL GLAZE 1K	5%	1/10W	
R430	1-216-053-00	METAL GLAZE 1.5K	5%	1/10W	
R432	1-216-081-00	METAL GLAZE 22K	5%	1/10W	
R433	1-216-011-00	METAL GLAZE 27	5%	1/10W	
R434	1-216-075-00	METAL GLAZE 12K	5%	1/10W	

The componants identified by shading and mark ⚠ are critical for safety.
Replace only with part number specified.

Les composants identifies par une trame et une marque ⚠ sont critiques pour la securite.
Ne les remplacer que par une piece portant le numero specifie.

• The components identified by ✖ in this manual have been carefully factory-selected for each set in order to satisfy regulations regarding X-ray radiation. Should replacement be required, replace only with the value originally used.

A G

REF. NO.	PART NO.	DESCRIPTION			REMARK
R435	1-216-075-00	METAL GLAZE 12K	5%	1/10W	
R436	1-216-011-00	METAL GLAZE 27	5%	1/10W	
R437	1-249-418-11	CARBON 1.2K	5%	1/4W	F
R438	1-249-418-11	CARBON 1.2K	5%	1/4W	F
R439	1-249-389-11	CARBON 4.7	5%	1/4W	F
R440	1-249-389-11	CARBON 4.7	5%	1/4W	F
R441	1-216-073-00	METAL GLAZE 10K	5%	1/10W	
R442	1-216-025-91	METAL GLAZE 100	5%	1/10W	
R443	1-216-295-91	CONDUCTOR, CHIP			
R444	1-216-295-91	CONDUCTOR, CHIP			
R1101	1-216-065-00	METAL GLAZE 4.7K	5%	1/10W	
R1102	1-216-083-00	METAL GLAZE 27K	5%	1/10W	
R1103	1-216-689-11	METAL GLAZE 39K	5%	1/10W	
R1104	1-216-049-91	METAL GLAZE 1K	5%	1/10W	
R1105	1-216-689-11	METAL GLAZE 39K	5%	1/10W	
R1106	1-216-083-00	METAL GLAZE 27K	5%	1/10W	
R1107	1-216-065-00	METAL GLAZE 4.7K	5%	1/10W	
R1108	1-215-900-11	METAL OXIDE 22K	5%	2W	F
R1501	1-216-354-11	METAL OXIDE 2.7	5%	1W	F
R1502	1-216-073-00	METAL GLAZE 10K	5%	1/10W	
R1504	1-216-073-00	METAL GLAZE 10K	5%	1/10W	
R1506	1-215-888-00	METAL OXIDE 220	5%	2W	F
R1507	1-216-081-00	METAL GLAZE 22K	5%	1/10W	
R1508	1-249-383-11	CARBON 1.5	5%	1/4W	F
R1509	1-216-073-00	METAL GLAZE 10K	5%	1/10W	
R1510	1-216-073-00	METAL GLAZE 10K	5%	1/10W	
R1511	1-216-057-00	METAL GLAZE 2.2K	5%	1/10W	
R1518	1-216-354-11	METAL OXIDE 2.7	5%	1W	F
R1520	1-216-089-91	METAL GLAZE 47K	5%	1/10W	
R1522	1-216-089-91	METAL GLAZE 47K	5%	1/10W	
R1523	1-216-073-00	METAL GLAZE 10K	5%	1/10W	
R1524	1-216-097-91	METAL GLAZE 100K	5%	1/10W	
R1525	1-215-456-00	METAL 30K	1%	1/4W	
R1526	1-215-456-00	METAL 30K	1%	1/4W	
R1527	1-216-097-91	METAL GLAZE 100K	5%	1/10W	
R1528	1-216-089-91	METAL GLAZE 47K	5%	1/10W	
R1529	1-216-025-91	METAL GLAZE 100	5%	1/10W	
R2106	1-216-025-91	METAL GLAZE 100	5%	1/10W	
R2109	1-216-041-00	METAL GLAZE 470	5%	1/10W	
R2110	1-216-073-00	METAL GLAZE 10K	5%	1/10W	
R2111	1-216-089-91	METAL GLAZE 47K	5%	1/10W	
R2112	1-216-065-00	METAL GLAZE 4.7K	5%	1/10W	
R2201	1-216-041-00	METAL GLAZE 470	5%	1/10W	
R2202	1-216-041-00	METAL GLAZE 470	5%	1/10W	
R2203	1-216-025-91	METAL GLAZE 100	5%	1/10W	
R2204	1-216-045-00	METAL GLAZE 680	5%	1/10W	
R2205	1-216-041-00	METAL GLAZE 470	5%	1/10W	
R2208	1-216-041-00	METAL GLAZE 470	5%	1/10W	
R2209	1-216-041-00	METAL GLAZE 470	5%	1/10W	
		<THERMISTOR>			
TH1501	1-800-193-00	THERMISTOR			
		<TUNER>			
TU1101 ⚠	8-598-340-00	TUNER BTF-WA404			
TU1102 ⚠	8-598-339-00	TUNER BTF-LA402			
		<CRYSTAL>			
X001	1-577-358-21	VIBRATOR, CERAMIC			
X002	1-578-774-11	VIBRATOR, CRYSTAL			
X301	1-567-505-11	OSCILLATOR, CRYSTAL			
X304	1-577-611-11	OSCILALTOR, CERAMIC			

****

REF. NO.	PART NO.	DESCRIPTION			REMARK
	* A-1316-295-A	G BOARD, COMPLETE (KP-46C36/53S35) **********			
	* A-1316-304-A	G BOARD, COMPLETE (KP-48S35/61S35) **********			
	* 4-057-835-01	PLATE, TRANSFORMER SHIELD			
	4-382-854-11	SCREW (M3X10), P, SW (+)			
	7-682-952-09	SCREW +PSW 3X16			
		<CAPACITOR>			
C502	1-126-959-11	ELECT	0.47MF	20%	50V
C504	1-102-116-00	CERAMIC	680PF	10%	50V
C505	1-130-471-00	MYLAR	0.001MF	5%	50V
C506	1-126-933-11	ELECT	100MF	20%	16V
C507	1-126-965-11	ELECT	22MF	20%	50V
C508	1-102-212-00	CERAMIC	820PF	10%	500V
C509	1-106-383-00	MYLAR	0.047MF	10%	200V
C510	1-102-002-00	CERAMIC	680PF	10%	500V
C511	1-130-475-00	MYLAR	0.0022MF	5%	50V
C512	1-130-471-00	FILM	0.001MF	5%	50V
C513	1-126-965-11	ELECT	22MF	20%	50V
✖C514	⚠	CERAMIC			2KV
C515	⚠ 1-136-334-91	FILM	0.033MF	5%	630V
C516	⚠ 1-136-084-11	FILM	0.0145MF	3%	2KV
C518	1-130-495-00	MYLAR	0.1MF	5%	50V
C519	1-106-359-00	MYLAR	0.0047MF	10%	100V
C520	1-162-116-00	CERAMIC	680PF	10%	2KV
C521	1-162-116-00	CERAMIC	680PF	10%	2KV
C523	1-113-506-11	FILM	0.75MF	5%	200V
C524	1-106-359-00	MYLAR	0.0047MF	10%	100V
C526	1-102-228-00	CERAMIC	470PF	10%	500V
C527	1-126-967-11	ELECT	47MF	20%	50V
C528	1-107-649-11	ELECT	2.2MF	20%	250V
C529	1-136-541-11	FILM	1.5MF	5%	200V
C530	1-110-626-11	ELECT	330MF	20%	160V
C531	1-126-971-11	ELECT	470MF	20%	50V
C532	1-126-971-11	ELECT	470MF	20%	50V
C533	1-128-562-11	ELECT	47MF	20%	100V
C535	1-106-387-00	MYLAR	0.068MF	10%	200V
C536	1-137-374-11	FILM	0.047MF	5%	50V
C537	1-126-968-11	ELECT	100MF	20%	50V
C538	1-126-968-11	ELECT	100MF	20%	50V
C539	1-162-114-00	CERAMIC	0.0047MF		2KV
C540	1-130-487-00	MYLAR	0.022MF	5%	50V
C541	1-130-489-00	MYLAR	0.033MF	5%	50V
C542	1-126-969-11	ELECT	220MF	20%	50V
C544	1-104-665-11	ELECT	100MF	20%	25V
C545	1-104-665-11	ELECT	100MF	20%	25V
C546	1-107-637-11	ELECT	22MF	20%	160V
C548	1-102-244-00	CERAMIC	220PF	10%	500V
C550	1-126-935-11	ELECT	470MF	20%	16V
C551	1-126-935-11	ELECT	470MF	20%	16V
C554	1-136-557-11	FILM	0.0033MF	5%	630V
C555	1-126-960-11	ELECT	1MF	20%	50V
C556	1-130-495-00	MYLAR	0.1MF	5%	50V
C602	⚠ 1-113-890-51	CERAMIC	0.0022MF	20%	250V
C603	1-102-228-00	CERAMIC	470PF	10%	500V
C604	⚠ 1-136-311-51	FILM	0.47MF	20%	125V
C605	⚠ 1-113-890-51	CERAMIC	0.0022MF	20%	250V
C606	⚠ 1-136-311-51	FILM	0.47MF	20%	125V
C607	1-125-692-11	ELECT(BLOCK)	820MF	20%	200V
C608	1-125-692-11	ELECT(BLOCK)	820MF	20%	200V
C612	1-164-646-11	CERAMIC	2200PF	10%	500V
C615	1-136-173-00	FILM	0.47MF	5%	50V
C616	1-136-173-00	FILM	0.47MF	5%	50V
C617	1-136-169-00	FILM	0.22MF	5%	50V
C618	1-136-169-00	FILM	0.22MF	5%	50V
C621	1-129-719-00	FILM	0.027MF	5%	630V

G

Les composants identifies par une trame et une marque ⚠ sont critiques pour la securite. Ne les remplacer que par une piece portant le numero specifie.

The componants identified by shading and mark ⚠ are critical for safety. Replace only with part number specified.

REF. NO.	PART NO.	DESCRIPTION			REMARK
C651	1-126-804-11	ELECT	100MF	20%	35V
C652	1-123-024-21	ELECT	33MF		160V
C653	1-104-652-11	ELECT	470MF	20%	10V
C654	1-104-652-11	ELECT	470MF	20%	10V
C655	1-126-943-11	ELECT	2200MF	20%	25V
C656	1-126-943-11	ELECT	2200MF	20%	25V
C657	1-126-943-11	ELECT	2200MF	20%	25V
C658	1-128-550-11	ELECT	2200MF	20%	50V
C659	1-102-074-00	CERAMIC	0.001MF	10%	50V
C660	1-126-235-11	ELECT	100MF	20%	6.3V
C661	1-102-074-00	CERAMIC	0.001MF	10%	50V
C662	1-104-664-11	ELECT	47MF	20%	25V
C663	1-104-664-11	ELECT	47MF	20%	25V
C664	1-104-664-11	ELECT	47MF	20%	25V
C665	1-104-666-11	ELECT	220MF	20%	25V
C666	1-126-960-11	ELECT	1MF	20%	50V
C671	1-104-664-11	ELECT	47MF	20%	25V
C672	1-126-971-11	ELECT	470MF	20%	50V
C673	1-164-644-11	CERAMIC	330PF	10%	500V
C675	1-104-665-11	ELECT	100MF	20%	25V
C676	1-126-960-11	ELECT	1MF	20%	50V
C801	1-104-665-11	ELECT	100MF	20%	25V
C802	1-104-665-11	ELECT	100MF	20%	25V
C803	1-126-934-11	ELECT	220MF	20%	16V
C804	1-126-934-11	ELECT	220MF	20%	16V
C805	1-126-934-11	ELECT	220MF	20%	16V
C806	1-126-934-11	ELECT	220MF	20%	16V
C807	1-137-374-11	FILM	0.047MF	5%	50V
C808	1-137-374-11	FILM	0.047MF	5%	50V
C809	1-137-374-11	FILM	0.047MF	5%	50V
C810	1-137-374-11	FILM	0.047MF	5%	50V
C811	1-137-366-11	FILM	0.0022MF	5%	50V
C812	1-136-169-00	FILM	0.22MF	5%	50V
C813	1-137-374-11	FILM	0.047MF	5%	50V
C815	1-104-665-11	ELECT	100MF	20%	25V
C816	1-126-964-11	ELECT	10MF	20%	50V
C818	1-126-933-11	ELECT	100MF	20%	16V
C819	1-126-964-11	ELECT	10MF	20%	50V
C820	1-102-114-00	CERAMIC	470PF	10%	50V
C821	1-130-495-00	MYLAR	0.1MF	5%	50V
C823	1-101-880-00	CERAMIC	47PF	5%	50V
C825	1-104-665-11	ELECT	100MF	20%	25V
C826	1-136-165-00	FILM	0.1MF	5%	50V
C827	1-126-960-11	ELECT	1MF	20%	50V
C828	1-137-366-11	FILM	0.0022MF	5%	50V
C829	1-126-959-11	ELECT	0.47MF	20%	50V
C830	1-130-467-00	FILM	470PF	5%	50V
C831	1-126-960-11	ELECT	1MF	20%	50V
C832	1-126-960-11	ELECT	1MF	20%	50V
C833	1-126-960-11	ELECT	1MF	20%	50V
C834	1-126-968-11	ELECT	100MF	20%	50V
C835	1-126-967-11	ELECT	47MF	20%	50V
C836	1-136-169-00	FILM	0.22MF	5%	50V
C837	1-126-963-11	ELECT	4.7MF	20%	50V
C838	1-104-665-11	ELECT	100MF	20%	25V
C839	1-137-374-11	FILM	0.047MF	5%	50V
C840	1-104-665-11	ELECT	100MF	20%	25V
C841	1-137-374-11	FILM	0.047MF	5%	50V
C842	1-137-374-11	FILM	0.047MF	5%	50V
C843	1-126-968-11	ELECT	100MF	20%	50V
C844	1-126-933-11	ELECT	100MF	20%	16V
C845	1-126-933-11	ELECT	100MF	20%	16V
C846	1-126-933-11	ELECT	100MF	20%	16V
C847	1-126-933-11	ELECT	100MF	20%	16V
C848	1-126-933-11	ELECT	100MF	20%	16V
C851	1-137-374-11	FILM	0.047MF	5%	50V
C852	1-137-374-11	FILM	0.047MF	5%	50V
C853	1-137-374-11	FILM	0.047MF	5%	50V
C854	1-126-933-11	ELECT	100MF	20%	16V
C857	1-126-933-11	ELECT	100MF	20%	16V
C858	1-104-665-11	ELECT	100MF	20%	25V
C860	1-126-933-11	ELECT	100MF	20%	16V
C861	1-137-374-11	FILM	0.047MF	5%	50V
C862	1-137-374-11	FILM	0.047MF	5%	50V
C863	1-137-374-11	FILM	0.047MF	5%	50V
C864	1-126-933-11	ELECT	100MF	20%	16V
C865	1-130-471-00	MYLAR	0.001MF	5%	50V
C866	1-136-177-00	FILM	1MF	5%	50V
C867	1-101-880-00	CERAMIC	47PF	5%	50V
C868	1-101-880-00	CERAMIC	47PF	5%	50V
C869	1-130-489-00	MYLAR	0.033MF	5%	50V
C871	1-101-880-00	CERAMIC	47PF	5%	50V
C872	1-101-880-00	CERAMIC	47PF	5%	50V
C873	1-101-880-00	CERAMIC	47PF	5%	50V
C880	1-126-961-11	ELECT	2.2MF	20%	50V
C881	1-102-973-00	CERAMIC	100PF	5%	50V
C882	1-102-973-00	CERAMIC	100PF	5%	50V
C883	1-102-973-00	CERAMIC	100PF	5%	50V
C884	1-104-665-11	ELECT	100MF	20%	25V
C885	1-126-961-11	ELECT	2.2MF	20%	50V
C886	1-102-973-00	CERAMIC	100PF	5%	50V
C887	1-102-973-00	CERAMIC	100PF	5%	50V
C888	1-102-973-00	CERAMIC	100PF	5%	50V
C889	1-104-665-11	ELECT	100MF	20%	25V
C897	1-104-665-11	ELECT	100MF	20%	25V

<CONNECTOR>

CN501	* 1-564-513-11	PLUG, CONNECTOR 10P
CN502	* 1-580-689-11	PIN, CONNECTOR (PC BOARD) 4P
CN503	* 1-580-689-11	PIN, CONNECTOR (PC BOARD) 4P
CN504	* 1-580-689-11	PIN, CONNECTOR (PC BOARD) 4P
CN505	* 1-506-371-00	PIN, CONNECTOR 2P
CN506	* 1-774-182-11	CONNECTOR, BOARD TO BOARD10P
CN507	* 1-564-507-11	PLUG, CONNECTOR 4P
CN601	* 1-580-843-11	PIN, CONNECTOR (POWER)
CN651	* 1-774-182-11	CONNECTOR, BOARD TO BOARD10P
CN652	* 1-774-182-11	CONNECTOR, BOARD TO BOARD10P
CN653	* 1-573-963-11	PIN, CONNECTOR (PC BOARD) 3P
CN801	* 1-564-507-11	PLUG, CONNECTOR 4P
CN802	* 1-564-507-11	PLUG, CONNECTOR 4P
CN803	* 1-564-507-11	PLUG, CONNECTOR 4P
CN804	* 1-774-182-11	CONNECTOR, BOARD TO BOARD10P
CN805	* 1-691-134-11	PIN, CONNECTOR (PC BOARD) 2P

<DIODE>

D501	8-719-991-33	DIODE 1SS133T-77
D502	8-719-991-33	DIODE 1SS133T-77
D504	8-719-921-63	DIODE MTZJ-7.5B
D507	⚠ 8-719-302-43	DIODE EL1Z
D508	8-719-900-26	DIODE ERD29-08J
D509	8-719-945-80	DIODE ERC06-15S
D510	8-719-945-80	DIODE ERC06-15S
D511	8-719-302-43	DIODE EL1Z
D513	8-719-302-43	DIODE EL1Z
D514	8-719-908-03	DIODE GP08D
D515	8-719-908-03	DIODE GP08D
D517	8-719-018-82	DIODE RGP02-20EL-6394
D519	8-719-991-33	DIODE 1SS133T-77
D520	8-719-302-43	DIODE EL1Z
D521	8-719-302-43	DIODE EL1Z
D524	8-719-991-33	DIODE 1SS133T-77
D527	8-719-109-85	DIODE RD5.1ESB2
D528	8-719-923-86	DIODE MTZJ-T-77-15
D602	⚠ 8-719-052-84	DIODE LN4SB60
D651	8-719-510-26	DIODE D1NL20-TA

The componants identified by shading and mark ⚠ are critical for safety.
Replace only with part number specified.

Les composants identifies par une trame et une marque ⚠ sont critiques pour la securite.
Ne les remplacer que par une piece portant le numero specifie.

G

REF. NO.	PART NO.	DESCRIPTION	REMARK
D652	8-719-991-33	DIODE 1SS133T-77	
D653	8-719-510-02	DIODE D1NS4	
D654	8-719-022-97	DIODE D2S4MF	
D655	8-719-061-56	DIODE RBA-402LLF-A	
D656	8-719-052-92	DIODE D10SBS4F	
D657	8-719-052-91	DIODE D4SBS4-F	
D658	8-719-510-12	DIODE D10SC4M	
D659	8-719-118-59	DIODE RD5.1F-T7B1	
D660	8-719-991-33	DIODE 1SS133T-77	
D661	8-719-200-82	DIODE 11ES2	
D662	8-719-991-33	DIODE 1SS133T-77	
D664	8-719-110-61	DIODE RD24ESB1	
D669	8-719-991-33	DIODE 1SS133T-77	
D670	8-719-921-86	DIODE MTZJ-13	
D691	8-719-200-82	DIODE 11ES2	
D692	8-719-200-82	DIODE 11ES2	
D693	8-719-200-82	DIODE 11ES2	
D694	8-719-200-82	DIODE 11ES2	
D801	8-719-110-17	DIODE RD10ESB2	
D802	8-719-110-17	DIODE RD10ESB2	
D803	8-719-110-17	DIODE RD10ESB2	
D804	8-719-110-17	DIODE RD10ESB2	
D820	8-719-109-68	DIODE RD3.6ESB1	
D828	8-719-109-89	DIODE RD5.6ESB2	
D829	8-719-109-84	DIODE RD5.1ESB1	
D835	8-719-109-89	DIODE RD5.6ESB2	
D840	8-719-991-33	DIODE 1SS133T-77	
D842	8-719-991-33	DIODE 1SS133T-77	
D845	8-719-991-33	DIODE 1SS133T-77	
D846	8-719-991-33	DIODE 1SS133T-77	
D847	8-719-982-19	DIODE MTZJ-30A	
D848	8-719-923-86	DIODE MTZJ-T-77-15	
D849	8-719-110-22	DIODE RD11ESB2	
D850	8-719-109-89	DIODE RD5.6ESB2	
D852	8-719-923-86	DIODE MTZJ-T-77-15	
D853	8-719-982-19	DIODE MTZJ-30A	
D854	8-719-982-19	DIODE MTZJ-30A	
D855	8-719-982-19	DIODE MTZJ-30A	
D856	8-719-923-86	DIODE MTZJ-T-77-15	
D857	8-719-982-19	DIODE MTZJ-30A	
D859	8-719-923-86	DIODE MTZJ-T-77-15	
D860	8-719-982-19	DIODE MTZJ-30A	
		<FUSE>	
F601	⚠1-532-748-11	FUSE, GLASS TUBE 6.3A/125V	
	1-533-223-11	CLIP, FUSE ; F601	
		<FERRITE BEAD>	
FB501	1-410-397-21	FERRITE BEAD INDUCTOR 1.1UH	
FB651	1-410-396-41	FERRITE BEAD INDUCTOR 0.45UH	
FB652	1-410-396-41	FERRITE BEAD INDUCTOR 0.45UH	
FB653	1-410-396-41	FERRITE BEAD INDUCTOR 0.45UH	
FB654	1-410-396-41	FERRITE BEAD INDUCTOR 0.45UH	
FB655	1-410-396-41	FERRITE BEAD INDUCTOR 0.45UH	
FB656	1-410-396-41	FERRITE BEAD INDUCTOR 0.45UH	
FB657	1-410-396-41	FERRITE BEAD INDUCTOR 0.45UH	
		<IC>	
IC501	8-759-133-90	IC uPC339C	
IC601	⚠8-729-041-12	TRANSISTOR MX0841AB-F	
IC651	⚠1-810-051-11	POWER MODULE DM-48	
IC652	8-759-012-67	IC MC7905CT	
IC653	8-759-231-53	IC TA7805S	
IC655	8-759-231-58	IC TA7812S	
IC801	8-759-327-51	IC PA0053B	
IC802	8-759-327-51	IC PA0053B	
IC803	8-759-183-37	IC CA0007AD	
IC804	8-759-464-79	IC PM0011AS	
IC805	8-759-711-28	IC NJM2058D	
IC806	8-759-464-79	IC PM0011AS	
IC808	8-759-464-79	IC PM0011AS	
IC809	8-749-012-97	IC STK392-110	
IC810	8-749-012-97	IC STK392-110	
IC811	8-759-634-51	IC M5218AP	
		<COIL>	
L502	1-410-478-11	INDUCTOR 47UH	
L503	1-459-111-00	COIL, DRAM CORE (CDI)	
L506	1-412-552-11	INDUCTOR 2.2mH	
L509	1-412-533-21	INDUCTOR 47UH	
L601	⚠1-424-248-11	TRANSFORMER, LINE FILTER	
L651	1-414-158-11	INDUCTOR 2.2UH	
L652	1-414-158-11	INDUCTOR 2.2UH	
L653	1-414-158-11	INDUCTOR 2.2UH	
L654	1-414-158-11	INDUCTOR 2.2UH	
L656	1-412-523-11	INDUCTOR 6.8UH	
L801	1-406-975-21	COIL, CHOKE 47UH	
L802	1-406-975-21	COIL, CHOKE 47UH	
		<NEON LAMP>	
NL501	1-519-108-99	LAMP, NEON	
		<IC LINK>	
PS601	⚠1-533-597-21	LINK, IC	
PS602	⚠1-533-597-21	LINK, IC	
		<TRANSISTOR>	
Q501	8-729-119-80	TRANSISTOR 2SC2688-LK	
Q502	8-729-024-05	TRANSISTOR 2SD2348(LBSONY-1)	
Q503	8-729-119-76	TRANSISTOR 2SA1175-HFE	
Q504	8-729-823-81	TRANSISTOR 2SC4632LS-CB7	
Q505	8-729-931-45	TRANSISTOR IRF614	
Q506	8-729-119-78	TRANSISTOR 2SC2785-HFE	
Q507	8-729-823-81	TRANSISTOR 2SC4632LS-CB7	
Q651	8-729-119-76	TRANSISTOR 2SA1175-HFE	
Q652	8-729-119-78	TRANSISTOR 2SC2785-HFE	
Q653	8-729-119-78	TRANSISTOR 2SC2785-HFE	
Q654	8-729-119-76	TRANSISTOR 2SA1175-HFE	
Q655	8-729-119-76	TRANSISTOR 2SA1175-HFE	
Q656	8-729-119-78	TRANSISTOR 2SC2785-HFE	
Q657	8-729-119-76	TRANSISTOR 2SA1175-HFE	
Q658	8-729-119-78	TRANSISTOR 2SC2785-HFE	
Q659	8-729-119-76	TRANSISTOR 2SA1175-HFE	
Q660	8-729-119-78	TRANSISTOR 2SC2785-HFE	
Q661	8-729-119-78	TRANSISTOR 2SC2785-HFE	
Q662	8-729-119-78	TRANSISTOR 2SC2785-HFE	
Q802	8-729-119-76	TRANSISTOR 2SA1175-HFE	
Q803	8-729-119-76	TRANSISTOR 2SA1175-HFE	
Q804	8-729-119-78	TRANSISTOR 2SC2785-HFE	
Q805	8-729-119-78	TRANSISTOR 2SC2785-HFE	
Q809	8-729-119-78	TRANSISTOR 2SC2785-HFE	
Q810	8-729-119-78	TRANSISTOR 2SC2785-HFE	
		<RESISTOR>	
R501	1-249-421-11	CARBON 2.2K 5% 1/4W	
R502	1-215-879-11	METAL OXIDE 47K 5% 1W	F
R503	1-247-843-11	CARBON 3.3K 5% 1/4W	
R504	1-249-419-11	CARBON 1.5K 5% 1/4W	
R506	1-215-444-00	METAL 9.1K 1% 1/4W	

G

• The components identified by ⊠ in this manual have been carefully factory-selected for each set in order to satisfy regulations regarding X-ray radiation. Should replacement be required, replace only with the value originally used.

Les composants identifies par une trame et une marque ⚠ sont critiques pour la securite. Ne les remplacer que par une piece portant le numero specifie.

The componants identified by shading and mark ⚠ are critical for safety. Replace only with part number specified.

REF. NO.	PART NO.	DESCRIPTION			REMARK	
R507	1-249-422-11	CARBON	2.7K	5%	1/4W	
R508	1-260-337-11	CARBON	5.6K	5%	1/2W	
R509	1-249-437-11	CARBON	47K	5%	1/4W	
R510	1-215-919-11	METAL OXIDE	2.2K	5%	3W	F
R511	1-215-919-11	METAL OXIDE	2.2K	5%	3W	F
R512	1-215-919-11	METAL OXIDE	2.2K	5%	3W	F
R513	1-249-424-11	CARBON	3.9K	5%	1/4W	
⊠R514 ⚠		METAL			1/4W	
R516	1-215-443-00	METAL	8.2K	1%	1/4W	
R517	1-215-449-00	METAL	15K	1%	1/4W	
R518	1-215-456-00	METAL	30K	1%	1/4W	
R519	1-247-863-91	CARBON	22K	5%	1/4W	
R522	1-249-428-11	CARBON	8.2K	5%	1/4W	
R523	1-249-437-11	CARBON	47K	5%	1/4W	
R524	1-247-863-91	CARBON	22K	5%	1/4W	
R525	1-249-405-11	CARBON	100	5%	1/4W	F
R528	1-215-910-00	METAL OXIDE	68	5%	3W	F
R530	1-249-437-11	CARBON	47K	5%	1/4W	
R531	1-260-326-11	CARBON	680	5%	1/2W	
R532	1-260-313-51	CARBON	56	5%	1/2W	
R533	1-214-912-00	METAL	91K	1%	1/2W	
R534	1-215-479-00	METAL	270K	1%	1/4W	
R535	1-247-887-00	CARBON	220K	5%	1/4W	
R536	1-249-377-11	CARBON	0.47	5%	1/4W	F
R537	1-260-336-11	CARBON	4.7K	5%	1/2W	
R538	1-247-863-91	CARBON	22K	5%	1/4W	
R539	1-249-377-11	CARBON	0.47	5%	1/4W	F
R540	1-249-379-11	CARBON	0.68	5%	1/4W	F
R541	1-247-807-31	CARBON	100	5%	1/4W	
R542	1-215-862-11	METAL OXIDE	68	5%	1W	F
					(48S35/61S35)	
R542	1-215-864-00	METAL OXIDE	150	5%	1W	F
					(46C36/53S35)	
R544	1-215-862-11	METAL OXIDE	68	5%	1W	F
					(48S35/61S35)	
R544	1-215-864-00	METAL OXIDE	150	5%	1W	F
					(46C36/53S35)	
R545	1-249-377-11	CARBON	0.47	5%	1/4W	F
R546	1-249-377-11	CARBON	0.47	5%	1/4W	F
R547	1-247-807-31	CARBON	100	5%	1/4W	
R548	1-249-413-11	CARBON	470	5%	1/4W	
R549	1-247-863-91	CARBON	22K	5%	1/4W	
R550	1-247-807-31	CARBON	100	5%	1/4W	
R551	1-249-437-11	CARBON	47K	5%	1/4W	
R552	1-247-807-31	CARBON	100	5%	1/4W	
R553	1-247-881-00	CARBON	120K	5%	1/4W	
R554	1-249-405-11	CARBON	100	5%	1/4W	F
R556	1-260-123-11	CARBON	100K	5%	1/2W	
R557	1-216-490-11	METAL OXIDE	39K	5%	3W	F
R558	1-216-490-11	METAL OXIDE	39K	5%	3W	F
R559	1-216-490-11	METAL OXIDE	39K	5%	3W	F
R560	1-215-399-00	METAL	120	1%	1/4W	
⊠R561 ⚠		METAL			1/4W	
R563	1-249-429-11	CARBON	10K	5%	1/4W	
R564	1-260-131-11	CARBON	470K	5%	1/2W	
R565	1-247-807-31	CARBON	100	5%	1/4W	
R566	1-249-377-11	CARBON	0.47	5%	1/4W	F
R567	1-249-377-11	CARBON	0.47	5%	1/4W	F
R568	1-247-903-00	CARBON	1M	5%	1/4W	
R569	1-216-392-11	METAL OXIDE	1.8	5%	3W	F
R570	1-215-910-00	METAL OXIDE	68	5%	3W	F
R571	1-249-422-11	CARBON	2.7K	5%	1/4W	
R572	1-247-895-91	CARBON	470K	5%	1/4W	
R573	1-249-430-11	CARBON	12K	5%	1/4W	
R574	1-249-429-11	CARBON	10K	5%	1/4W	
R577	1-249-422-11	CARBON	2.7K	5%	1/4W	
R579	1-247-895-91	CARBON	470K	5%	1/4W	
R580	1-249-434-11	CARBON	27K	5%	1/4W	
R581	1-249-429-11	CARBON	10K	5%	1/4W	

REF. NO.	PART NO.	DESCRIPTION			REMARK	
R583	1-249-428-11	CARBON	8.2K	5%	1/4W	
R584	1-247-887-00	CARBON	220K	5%	1/4W	
R585	1-216-490-11	METAL OXIDE	39K	5%	3W	F
R586	1-260-292-11	CARBON	1	5%	1/2W	
R588	1-247-863-91	CARBON	22K	5%	1/4W	
R589	1-247-887-00	CARBON	220K	5%	1/4W	
R591	1-215-917-11	METAL OXIDE	1K	5%	3W	F
R601 ⚠	1-219-512-91	RESISTOR(SURGE RESISTANT)	2.2M			
R602 ⚠	1-202-981-21	WIREWOUND	0.82	5%	20W	
R608 ⚠	1-202-933-61	FUSIBLE	0.1	10%	1/2W	F
R609	1-247-887-00	CARBON	220K	5%	1/4W	
R610	1-247-887-00	CARBON	220K	5%	1/4W	
R611	1-216-353-00	METAL OXIDE	2.2	5%	1W	F
R612	1-247-887-00	CARBON	220K	5%	1/4W	
R613	1-216-353-00	METAL OXIDE	2.2	5%	1W	F
R614	1-247-887-00	CARBON	220K	5%	1/4W	
R651	1-249-429-11	CARBON	10K	5%	1/4W	
R652	1-249-425-11	CARBON	4.7K	5%	1/4W	
R653	1-249-377-11	CARBON	0.47	5%	1/4W	F
R655	1-247-887-00	CARBON	220K	5%	1/4W	
R656	1-260-288-11	CARBON	0.47	5%	1/2W	
R657	1-249-429-11	CARBON	10K	5%	1/4W	
R658	1-249-417-11	CARBON	1K	5%	1/4W	
R659	1-260-095-11	CARBON	470	5%	1/2W	
R660	1-249-413-11	CARBON	470	5%	1/4W	
R661	1-249-417-11	CARBON	1K	5%	1/4W	F
R662	1-249-425-11	CARBON	4.7K	5%	1/4W	
R664	1-249-425-11	CARBON	4.7K	5%	1/4W	
R665	1-247-807-31	CARBON	100	5%	1/4W	
R667	1-249-417-11	CARBON	1K	5%	1/4W	
R668	1-249-377-11	CARBON	0.47	5%	1/4W	F
R669	1-249-429-11	CARBON	10K	5%	1/4W	
R672	1-249-421-11	CARBON	2.2K	5%	1/4W	
R673	1-249-413-11	CARBON	470	5%	1/4W	
R675	1-215-417-00	METAL	680	1%	1/4W	
R676	1-216-369-00	METAL OXIDE	1	5%	2W	F
R677	1-247-807-31	CARBON	100	5%	1/4W	
R679	1-249-421-11	CARBON	2.2K	5%	1/4W	
R680	1-249-417-11	CARBON	1K	5%	1/4W	
R681	1-249-417-11	CARBON	1K	5%	1/4W	
R682	1-249-417-11	CARBON	1K	5%	1/4W	
R683	1-249-417-11	CARBON	1K	5%	1/4W	
R684	1-249-417-11	CARBON	1K	5%	1/4W	
R686	1-215-421-00	METAL	1K	1%	1/4W	
R687	1-215-441-00	METAL	6.8K	1%	1/4W	
R688	1-215-481-00	METAL	330K	1%	1/4W	
R689	1-249-425-11	CARBON	4.7K	5%	1/4W	
R690	1-249-417-11	CARBON	1K	5%	1/4W	
R692	1-249-425-11	CARBON	4.7K	5%	1/4W	
R693	1-249-429-11	CARBON	10K	5%	1/4W	
R695	1-247-807-31	CARBON	100	5%	1/4W	
R696	1-249-417-11	CARBON	1K	5%	1/4W	
R697	1-249-417-11	CARBON	1K	5%	1/4W	
R801	1-249-437-11	CARBON	47K	5%	1/4W	
R803	1-249-430-11	CARBON	12K	5%	1/4W	
R804	1-249-429-11	CARBON	10K	5%	1/4W	
R805	1-247-807-31	CARBON	100	5%	1/4W	
R806	1-249-429-11	CARBON	10K	5%	1/4W	
R807	1-247-807-31	CARBON	100	5%	1/4W	
R808	1-249-429-11	CARBON	10K	5%	1/4W	
R809	1-249-425-11	CARBON	4.7K	5%	1/4W	
R810	1-247-807-31	CARBON	100	5%	1/4W	
R811	1-247-807-31	CARBON	100	5%	1/4W	
R812	1-249-429-11	CARBON	10K	5%	1/4W	
R813	1-249-429-11	CARBON	10K	5%	1/4W	
R814	1-247-807-31	CARBON	100	5%	1/4W	
R815	1-247-807-31	CARBON	100	5%	1/4W	
R816	1-247-807-31	CARBON	100	5%	1/4W	
R817	1-247-807-31	CARBON	100	5%	1/4W	

REF. NO.	PART NO.	DESCRIPTION			REMARK
R818	1-249-430-11	CARBON	12K	5%	1/4W
R820	1-249-429-11	CARBON	10K	5%	1/4W
R821	1-249-428-11	CARBON	8.2K	5%	1/4W
R822	1-249-417-11	CARBON	1K	5%	1/4W
R823	1-249-417-11	CARBON	1K	5%	1/4W
R824	1-215-462-00	METAL	51K	1%	1/4W
R825	1-249-441-11	CARBON	100K	5%	1/4W
R826	1-215-462-00	METAL	51K	1%	1/4W
R827	1-249-417-11	CARBON	1K	5%	1/4W
R828	1-249-426-11	CARBON	5.6K	5%	1/4W
R829	1-249-426-11	CARBON	5.6K	5%	1/4W
R830	1-249-414-11	CARBON	560	5%	1/4W
R831	1-249-414-11	CARBON	560	5%	1/4W
R832	1-249-441-11	CARBON	100K	5%	1/4W
R833	1-249-417-11	CARBON	1K	5%	1/4W
R834	1-249-441-11	CARBON	100K	5%	1/4W
R835	1-249-441-11	CARBON	100K	5%	1/4W
R836	1-247-807-31	CARBON	100	5%	1/4W
R837	1-249-441-11	CARBON	100K	5%	1/4W
R838	1-249-421-11	CARBON	2.2K	5%	1/4W
R841	1-247-815-91	CARBON	220	5%	1/4W
R842	1-247-807-31	CARBON	100	5%	1/4W
R843	1-247-807-31	CARBON	100	5%	1/4W
R844	1-247-807-31	CARBON	100	5%	1/4W
R845	1-249-441-11	CARBON	100K	5%	1/4W
R846	1-247-807-31	CARBON	100	5%	1/4W
R847	1-215-469-00	METAL	100K	1%	1/4W
R850	1-215-469-00	METAL	100K	1%	1/4W
R851	1-247-807-31	CARBON	100	5%	1/4W
R852	1-247-807-31	CARBON	100	5%	1/4W
R853	1-247-887-00	CARBON	220K	5%	1/4W
R854	1-249-429-11	CARBON	10K	5%	1/4W
R855	1-247-815-91	CARBON	220	5%	1/4W
R856	1-247-807-31	CARBON	100	5%	1/4W
R857	1-247-807-31	CARBON	100	5%	1/4W
R858	1-215-455-00	METAL	27K	1%	1/4W
R859	1-215-455-00	METAL	27K	1%	1/4W
R860	1-215-455-00	METAL	27K	1%	1/4W
R861	1-215-455-00	METAL	27K	1%	1/4W
R862	1-215-455-00	METAL	27K	1%	1/4W
R863	1-215-455-00	METAL	27K	1%	1/4W
R865	1-249-424-11	CARBON	3.9K	5%	1/4W
R867	1-215-461-00	METAL	47K	1%	1/4W
R868	1-215-445-00	METAL	10K	1%	1/4W
R869	1-249-425-11	CARBON	4.7K	5%	1/4W
R871	1-249-417-11	CARBON	1K	5%	1/4W
R872	1-249-425-11	CARBON	4.7K	5%	1/4W
R873	1-247-807-31	CARBON	100	5%	1/4W
R874	1-249-429-11	CARBON	10K	5%	1/4W
R875	1-249-441-11	CARBON	100K	5%	1/4W
R879	1-215-444-00	METAL	9.1K	1%	1/4W
R880	1-259-878-11	CARBON	1.5M	5%	1/4W
R881	1-249-408-11	CARBON	180	5%	1/4W
R882	1-215-445-00	METAL	10K	1%	1/4W
R883	1-215-445-00	METAL	10K	1%	1/4W
R884	1-215-445-00	METAL	10K	1%	1/4W
R885	1-249-441-11	CARBON	100K	5%	1/4W
R886	1-249-428-11	CARBON	8.2K	5%	1/4W
R887	1-247-807-31	CARBON	100	5%	1/4W
R888	1-247-807-31	CARBON	100	5%	1/4W
R889	1-249-438-11	CARBON	56K	5%	1/4W
R890	1-249-441-11	CARBON	100K	5%	1/4W
R891	1-249-429-11	CARBON	10K	5%	1/4W
R892	1-215-445-00	METAL	10K	1%	1/4W
R895	1-249-421-11	CARBON	2.2K	5%	1/4W
R896	1-249-441-11	CARBON	100K	5%	1/4W
R897	1-247-807-31	CARBON	100	5%	1/4W
R898	1-247-815-91	CARBON	220	5%	1/4W

REF. NO.	PART NO.	DESCRIPTION			REMARK
R899	1-247-815-91	CARBON	220	5%	1/4W
R901	1-249-439-11	CARBON	68K	5%	1/4W
R902	1-249-438-11	CARBON	56K	5%	1/4W
R903	1-215-421-00	METAL	1K	1%	1/4W
R904	1-214-800-11	METAL	2.2	1%	1/2W
R905	1-214-800-11	METAL	2.2	1%	1/2W
R906	1-214-800-11	METAL	2.2	1%	1/2W
R907	1-247-815-91	CARBON	220	5%	1/4W
R908	1-247-815-91	CARBON	220	5%	1/4W
R909	1-215-421-00	METAL	1K	1%	1/4W
R910	1-215-421-00	METAL	1K	1%	1/4W
R911	1-215-455-00	METAL	27K	1%	1/4W
R912	1-215-469-00	METAL	100K	1%	1/4W
R913	1-215-455-00	METAL	27K	1%	1/4W
R914	1-215-455-00	METAL	27K	1%	1/4W
R915	1-215-455-00	METAL	27K	1%	1/4W
R916	1-215-455-00	METAL	27K	1%	1/4W
R917	1-215-455-00	METAL	27K	1%	1/4W
R918	1-215-455-00	METAL	27K	1%	1/4W
R919	1-249-435-11	CARBON	33K	5%	1/4W
R920	1-214-800-11	METAL	2.2	1%	1/2W
R921	1-249-431-11	CARBON	15K	5%	1/4W
R922	1-215-445-00	METAL	10K	1%	1/4W
R923	1-249-425-11	CARBON	4.7K	5%	1/4W
R924	1-215-444-00	METAL	9.1K	1%	1/4W
R925	1-249-425-11	CARBON	4.7K	5%	1/4W
R926	1-249-408-11	CARBON	180	5%	1/4W
R927	1-215-445-00	METAL	10K	1%	1/4W
R928	1-215-445-00	METAL	10K	1%	1/4W
R929	1-214-800-11	METAL	2.2	1%	1/2W
R930	1-214-800-11	METAL	2.2	1%	1/2W
R931	1-215-445-00	METAL	10K	1%	1/4W
R933	1-215-453-00	METAL	22K	1%	1/4W
R934	1-249-429-11	CARBON	10K	5%	1/4W
R935	1-249-429-11	CARBON	10K	5%	1/4W
R936	1-249-429-11	CARBON	10K	5%	1/4W
R937	1-249-435-11	CARBON	33K	5%	1/4W
R938	1-215-421-00	METAL	1K	1%	1/4W
R939	1-259-878-11	CARBON	1.5M	5%	1/4W
R940	1-249-441-11	CARBON	100K	5%	1/4W
R941	1-249-441-11	CARBON	100K	5%	1/4W
R942	1-249-421-11	CARBON	2.2K	5%	1/4W
R943	1-249-441-11	CARBON	100K	5%	1/4W
R944	1-215-421-00	METAL	1K	1%	1/4W
R945	1-249-429-11	CARBON	10K	5%	1/4W
R946	1-215-421-00	METAL	1K	1%	1/4W
R947	1-249-441-11	CARBON	100K	5%	1/4W
R948	1-247-815-91	CARBON	220	5%	1/4W
R949	1-247-807-31	CARBON	100	5%	1/4W
R950	1-247-807-31	CARBON	100	5%	1/4W
R951	1-247-807-31	CARBON	100	5%	1/4W
R952	1-247-807-31	CARBON	100	5%	1/4W
R953	1-247-863-91	CARBON	22K	5%	1/4W
R954	1-215-433-00	METAL	3.3K	1%	1/4W
R955	1-215-433-00	METAL	3.3K	1%	1/4W
R956	1-249-429-11	CARBON	10K	5%	1/4W
R957	1-214-800-11	METAL	2.2	1%	1/2W
R958	1-214-800-11	METAL	2.2	1%	1/2W
R959	1-215-433-00	METAL	3.3K	1%	1/4W
R961	1-249-425-11	CARBON	4.7K	5%	1/4W
R962	1-214-800-11	METAL	2.2	1%	1/2W
R963	1-214-800-11	METAL	2.2	1%	1/2W
R964	1-215-433-00	METAL	3.3K	1%	1/4W
R965	1-215-433-00	METAL	3.3K	1%	1/4W
R966	1-247-815-91	CARBON	220	5%	1/4W
R967	1-215-455-00	METAL	27K	1%	1/4W
R968	1-215-455-00	METAL	27K	1%	1/4W
R969	1-215-455-00	METAL	27K	1%	1/4W

G CR

Les composants identifies par une trame et une marque ⚠ sont critiques pour la securite. Ne les remplacer que par une piece portant le numero specifie.

The componants identified by shading and mark ⚠ are critical for safety. Replace only with part number specified.

REF. NO.	PART NO.	DESCRIPTION			REMARK
R970	1-215-455-00	METAL	27K	1%	1/4W
R971	1-215-455-00	METAL	27K	1%	1/4W
R972	1-215-455-00	METAL	27K	1%	1/4W
R973	1-214-800-11	METAL	2.2	1%	1/2W
R974	1-215-463-00	METAL	56K	1%	1/4W
R975	1-214-800-11	METAL	2.2	1%	1/2W
R976	1-215-433-00	METAL	3.3K	1%	1/4W
R977	1-247-815-91	CARBON	220	5%	1/4W
R978	1-215-445-00	METAL	10K	1%	1/4W
R979	1-249-425-11	CARBON	4.7K	5%	1/4W
R980	1-247-815-91	CARBON	220	5%	1/4W
R981	1-247-815-91	CARBON	220	5%	1/4W
R982	1-247-895-91	CARBON	470K	5%	1/4W
R983	1-247-815-91	CARBON	220	5%	1/4W
R984	1-215-444-00	METAL	9.1K	1%	1/4W
R985	1-215-445-00	METAL	10K	1%	1/4W
R987	1-249-408-11	CARBON	180	5%	1/4W
R988	1-215-445-00	METAL	10K	1%	1/4W
R989	1-249-425-11	CARBON	4.7K	5%	1/4W
R990	1-249-429-11	CARBON	10K	5%	1/4W
R991	1-249-429-11	CARBON	10K	5%	1/4W
R992	1-259-878-11	CARBON	1.5M	5%	1/4W
R993	1-249-425-11	CARBON	4.7K	5%	1/4W
R994	1-249-425-11	CARBON	4.7K	5%	1/4W
R995	1-249-413-11	CARBON	470	5%	1/4W
R996	1-247-815-91	CARBON	220	5%	1/4W
R997	1-215-445-00	METAL	10K	1%	1/4W
R998	1-249-434-11	CARBON	27K	5%	1/4W
R999	1-249-434-11	CARBON	27K	5%	1/4W

<RELAY>

RY601	⚠ 1-755-032-11	RELAY

<TRANSFORMER>

T501	⚠ 1-437-195-14	TRANSFORMER, HORIZONTAL DRIVE
T502	⚠ 1-431-211-11	TRANSFORMER, FERRITE (PMT)
T503	⚠ 1-431-212-11	TRANSFORMER, HORIZONTAL LINEAR
T504	⚠ 1-453-238-11	TRANSFORMER ASSY, FLYBACK (NX-4007//X4A4)
T603	⚠ 1-423-665-11	TRANSFORMER, POWER
T604	⚠ 1-429-992-11	TRANSFORMER, CONVERTER (PRT)
T605	⚠ 1-429-985-11	TRANSFORMER, CONVERTER (PIT)

<THERMISTOR>

TH801	1-808-269-11	THERMISTOR

****

* A-1331-667-A CR BOARD, COMPLETE
****

<CAPACITOR>

C702	1-102-949-00	CERAMIC	12PF	5%	50V
C703	1-104-664-11	ELECT	47MF	20%	25V
C704	1-126-964-11	ELECT	10MF	20%	50V
C705	1-161-754-00	CERAMIC	0.001MF	10%	2KV
C706	1-126-934-11	ELECT	220MF	20%	16V
C707	1-107-585-11	CERAMIC	5PF	0.25PF	500V
C708	1-102-050-00	CERAMIC	0.01MF		500V
C709	1-162-115-00	CERAMIC	330PF	10%	2KV
C712	1-107-662-11	ELECT	22MF	20%	250V

REF. NO.	PART NO.	DESCRIPTION			REMARK

<CONNECTOR>

CN701	1-695-915-11	TAB (CONTACT)
CN702	* 1-564-510-11	PLUG, CONNECTOR 7P
CN703	* 1-564-512-11	PLUG, CONNECTOR 9P
CN704	* 1-508-784-00	PIN, CONNECTOR (5mm PITCH) 1P
CN705	⚠ 1-251-182-11	SOCKET, PICTURE TUBE
CN706	* 1-564-512-11	PLUG, CONNECTOR 9P

<DIODE>

D701	8-719-991-33	DIODE 1SS133T-77
D702	8-719-991-33	DIODE 1SS133T-77
D703	8-719-991-33	DIODE 1SS133T-77
D704	8-719-991-33	DIODE 1SS133T-77
D705	8-719-923-86	DIODE MTZJ-T-77-15
D706	8-719-923-86	DIODE MTZJ-T-77-15
D708	8-719-110-17	DIODE RD10ESB2
D709	8-719-109-89	DIODE RD5.6ESB2
D710	8-719-991-33	DIODE 1SS133T-77

<IC>

IC701	8-759-434-39	IC TDA6106Q

<COIL>

L701	1-408-429-00	INDUCTOR 470UH

<NEON LAMP>

NL701	1-519-108-99	LAMP, NEON

<TRANSISTOR>

Q701	8-729-119-76	TRANSISTOR 2SA1175-HFE
Q702	8-729-119-76	TRANSISTOR 2SA1175-HFE

<RESISTOR>

R701	1-219-743-11	RESISTOR (SURGE RESISTANT) 100				
R702	1-215-425-00	METAL	1.5K	1%	1/4W	
R703	1-215-437-00	METAL	4.7K	1%	1/4W	
R704	1-260-132-11	CARBON	560K	5%	1/2W	
R705	1-215-424-00	METAL	1.3K	1%	1/4W	
R706	1-215-437-00	METAL	4.7K	1%	1/4W	
R707	1-249-435-11	CARBON	33K	5%	1/4W	
R708	1-215-428-00	METAL	2K	1%	1/4W	
R709	1-260-101-11	CARBON	1.5K	5%	1/2W	
R710	1-215-903-11	METAL OXIDE	68K	5%	2W	F
R711	1-249-435-11	CARBON	33K	5%	1/4W	
R712	1-247-807-31	CARBON	100	5%	1/4W	
R713	1-249-437-11	CARBON	47K	5%	1/4W	
R714	1-260-099-11	CARBON	1K	5%	1/2W	
R715	1-260-133-11	CARBON	680K	5%	1/2W	
R717	1-249-417-11	CARBON	1K	5%	1/4W	
R718	1-247-807-31	CARBON	100	5%	1/4W	
R719	1-260-087-11	CARBON	100	5%	1/2W	

<SPARK GAP>

SG701	1-519-422-11	GAP, SPARK
SG702	1-519-422-11	GAP, SPARK

****

The componants identified by shading and mark ⚠ are critical for safety.
Replace only with part number specified.

Les composants identifies par une trame et une marque ⚠ sont critiques pour la securite.
Ne les remplacer que par une piece portant le numero specifie.

CG CB HA

REF. NO.	PART NO.	DESCRIPTION				REMARK
	* A-1331-668-A	CG BOARD, COMPLETE **********				
		<CAPACITOR>				
C732	1-102-949-00	CERAMIC	12PF	5%	50V	
C733	1-161-754-00	CERAMIC	0.001MF	10%	2KV	
C735	1-102-050-00	CERAMIC	0.01MF		500V	
C736	1-162-115-00	CERAMIC	330PF	10%	2KV	
C737	1-107-662-11	ELECT	22MF	20%	250V	
C743	1-247-807-31	CARBON	100	5%	1/4W	
		<CONNECTOR>				
CN731	1-695-915-11	TAB (CONTACT)				
CN732	* 1-564-510-11	PLUG, CONNECTOR 7P				
CN733	* 1-564-507-11	PLUG, CONNECTOR 4P				
CN734	* 1-508-784-00	PIN, CONNECTOR (5mm PITCH) 1P				
CN735	⚠ 1-251-182-11	SOCKET, PICTURE TUBE				
CN736	* 1-564-512-11	PLUG, CONNECTOR 9P				
CN737	* 1-564-512-11	PLUG, CONNECTOR 9P				
		<DIODE>				
D731	8-719-991-33	DIODE 1SS133T-77				
D732	8-719-991-33	DIODE 1SS133T-77				
D733	8-719-110-17	DIODE RD10ESB2				
		<IC>				
IC731	8-759-434-39	IC TDA6106Q				
		<COIL>				
L731	1-408-429-00	INDUCTOR 470UH				
		<NEON LAMP>				
NL731	1-519-108-99	LAMP, NEON				
		<RESISTOR>				
R731	1-219-743-11	RESISTOR (SURGE RESISTANT) 100				
R732	1-260-132-11	CARBON	560K	5%	1/2W	
R733	1-215-421-00	METAL	1K	1%	1/4W	
R735	1-249-441-11	CARBON	100K	5%	1/4W	
R736	1-215-430-00	METAL	2.4K	1%	1/4W	
R737	1-260-101-11	CARBON	1.5K	5%	1/2W	
R738	1-215-903-11	METAL OXIDE	68K	5%	2W	F
R739	1-260-133-11	CARBON	680K	5%	1/2W	
R740	1-260-099-11	CARBON	1K	5%	1/2W	
R741	1-215-435-00	METAL	3.9K	1%	1/4W	
R742	1-247-885-00	CARBON	180K	5%	1/4W	
		<SPARK GAP>				
SG731	1-519-422-11	GAP, SPARK				
SG732	1-519-422-11	GAP, SPARK				

****

REF. NO.	PART NO.	DESCRIPTION				REMARK
	* A-1331-669-A	CB BOARD, COMPLETE **********				
		<CAPACITOR>				
C762	1-102-949-00	CERAMIC	12PF	5%	50V	
C763	1-161-754-00	CERAMIC	0.001MF	10%	2KV	
C765	1-102-050-00	CERAMIC	0.01MF		500V	
C766	1-162-115-00	CERAMIC	330PF	10%	2KV	
C767	1-107-662-11	ELECT	22MF	20%	250V	
		<CONNECTOR>				
CN761	1-695-915-11	TAB (CONTACT)				
CN762	* 1-564-507-11	PLUG, CONNECTOR 4P				
CN763	* 1-508-784-00	PIN, CONNECTOR (5mm PITCH) 1P				
CN764	⚠ 1-251-182-11	SOCKET, PICTURE TUBE				
CN765	* 1-564-512-11	PLUG, CONNECTOR 9P				
CN766	* 1-564-513-11	PLUG, CONNECTOR 10P				
		<DIODE>				
D761	8-719-991-33	DIODE 1SS133T-77				
D762	8-719-923-86	DIODE MTZJ-T-77-15				
D763	8-719-110-17	DIODE RD10ESB2				
D764	8-719-923-86	DIODE MTZJ-T-77-15				
		<IC>				
IC761	8-759-434-39	IC TDA6106Q				
		<COIL>				
L761	1-408-429-00	INDUCTOR 470UH				
		<NEON LAMP>				
NL761	1-519-108-99	LAMP, NEON				
		<RESISTOR>				
R761	1-219-743-11	RESISTOR (SURGE RESISTANT) 100				
R762	1-260-132-11	CARBON	560K	5%	1/2W	
R763	1-215-420-00	METAL	910	1%	1/4W	
R764	1-249-426-11	CARBON	5.6K	5%	1/4W	
R765	1-215-430-00	METAL	2.4K	1%	1/4W	
R766	1-260-101-11	CARBON	1.5K	5%	1/2W	
R767	1-215-903-11	METAL OXIDE	68K	5%	2W	F
R768	1-260-133-11	CARBON	680K	5%	1/2W	
R769	1-260-099-11	CARBON	1K	5%	1/2W	
R770	1-247-807-31	CARBON	100	5%	1/4W	
R771	1-260-087-11	CARBON	100	5%	1/2W	
		<SPARK GAP>				
SG761	1-519-422-11	GAP, SPARK				
SG762	1-519-422-11	GAP, SPARK				

****

REF. NO.	PART NO.	DESCRIPTION				REMARK
	* A-1372-288-A	HA BOARD, COMPLETE **********				(except KP-46C36)
	* A-1372-304-A	HA BOARD, COMPLETE (KP-46C36 only) **********				
		<CAPACITOR>				
C1301	1-137-399-11	FILM	0.1MF	5%	50V	(46C36 only)
C1302	1-126-959-11	ELECT	0.47MF	20%	50V	(46C36 only)
C1304	1-126-964-11	ELECT	10MF	20%	50V	
C1305	1-137-399-11	FILM	0.1MF	5%	50V	(46C36 only)

HA ZR ZG

REF. NO.	PART NO.	DESCRIPTION			REMARK
C1306	1-126-964-11	ELECT	10MF	20%	50V (46C36 only)
C1307	1-126-964-11	ELECT	10MF	20%	50V (46C36 only)
		<CONNECTOR>			
CN1301	1-564-523-11	PLUG, CONNECTOR 8P			
CN1302	*1-564-526-11	PLUG, CONNECTOR 11P (46C36 only)			
CN1304	*1-564-518-11	PLUG, CONNECTOR 3P (46C36 only)			
		<DIODE>			
D1301	8-719-110-17	DIODE RD10ESB2 (46C36 only)			
D1302	8-719-110-17	DIODE RD10ESB2 (46C36 only)			
D1303	8-719-110-17	DIODE RD10ESB2 (46C36 only)			
D1304	8-719-053-43	DIODE SLR-325VCT31			
D1305	8-719-053-43	DIODE SLR-325VCT31			
D1306	8-719-110-17	DIODE RD10ESB2 (46C36 only)			
D1307	8-719-110-17	DIODE RD10ESB2 (46C36 only)			
D1308	8-719-110-17	DIODE RD10ESB2 (46C36 only)			
		<IC>			
IC1301	8-741-780-51	IC SBX1780-51			
		<JACK>			
J1301	1-770-361-11	TERMINAL BLOCK, S (46C36 only)			
		<RESISTOR>			
R1301	1-249-425-11	CARBON	4.7K	5%	1/4W (46C36 only)
R1302	1-249-416-11	CARBON	820	5%	1/4W
R1303	1-249-417-11	CARBON	1K	5%	1/4W
R1304	1-249-425-11	CARBON	4.7K	5%	1/4W
R1305	1-247-815-91	CARBON	220	5%	1/4W
R1306	1-247-815-91	CARBON	220	5%	1/4W
R1307	1-249-420-11	CARBON	1.8K	5%	1/4W
R1308	1-247-895-91	CARBON	470K	5%	1/4W (46C36 only)
R1309	1-247-895-91	CARBON	470K	5%	1/4W (46C36 only)
R1310	1-249-429-11	CARBON	10K	5%	1/4W
R1311	1-247-804-11	CARBON	75	5%	1/4W (46C36 only)
R1312	1-247-804-11	CARBON	75	5%	1/4W (46C36 only)
R1314	1-247-807-31	CARBON	100	5%	1/4W
R1315	1-247-804-11	CARBON	75	5%	1/4W (46C36 only)
		<SWITCH>			
S1301	1-572-198-11	SWITCH, KEYBOARD			
S1302	1-572-198-11	SWITCH, KEYBOARD			
S1303	1-572-198-11	SWITCH, KEYBOARD			
S1304	1-572-198-11	SWITCH, KEYBOARD			
S1305	1-572-198-11	SWITCH, KEYBOARD			
S1306	1-572-198-11	SWITCH, KEYBOARD			
S1307	1-572-198-11	SWITCH, KEYBOARD			

****

REF. NO.	PART NO.	DESCRIPTION				
	*A-1390-682-A	ZR BOARD, COMPLETE **********				
		<CONNECTOR>				
CN1401	*1-564-510-11	PLUG, CONNECTOR 7P				
CN1403	*1-564-506-11	PLUG, CONNECTOR 3P				
CN1404	*1-564-507-11	PLUG, CONNECTOR 4P				
CN1405	*1-580-689-11	PIN, CONNECTOR (PC BOARD) 4P				
		<CONNECTOR>				
DY1401	1-451-454-11	DEFLECTION YOKE				
		<RESISTOR>				
R1401	1-249-414-11	CARBON	560	5%	1/4W	
R1402	1-249-414-11	CARBON	560	5%	1/4W	
R1415	1-215-908-00	METAL OXIDE	33	5%	3W	F
R1418	1-216-475-11	METAL OXIDE	120	5%	3W	F

****

	*A-1390-683-A	ZG BOARD, COMPLETE **********			
	4-382-854-11	SCREW (M3X10), P, SW (+)			
		<CAPACITOR>			
C1433	1-104-999-11	MYLAR	0.1MF	10%	200V
C1434	1-106-383-00	MYLAR	0.047MF	10%	200V
C1435	1-107-667-11	ELECT	2.2MF	20%	160V
C1436	1-137-364-11	FILM	0.001MF	5%	50V
C1437	1-137-364-11	FILM	0.001MF	5%	50V
C1438	1-106-383-00	MYLAR	0.047MF	10%	200V
C1439	1-161-830-00	CERAMIC	0.0047MF		500V
C1440	1-126-933-11	ELECT	100MF	20%	16V
C1441	1-102-074-00	CERAMIC	0.001MF	10%	50V
C1443	1-126-935-11	ELECT	470MF	20%	16V
C1444	1-107-639-11	ELECT	47MF	20%	160V
C1445	1-126-933-11	ELECT	100MF	20%	16V
C1446	1-126-933-11	ELECT	100MF	20%	16V
		<CONNECTOR>			
CN1431	*1-564-508-11	PLUG, CONNECTOR 5P			
CN1432	*1-564-510-11	PLUG, CONNECTOR 7P			
CN1433	*1-564-507-11	PLUG, CONNECTOR 4P			
CN1434	*1-580-689-11	PIN, CONNECTOR (PC BOARD) 4P			
CN1461	*1-564-506-11	PLUG, CONNECTOR 3P			
CN1462	*1-564-507-11	PLUG, CONNECTOR 4P			
CN1464	*1-564-507-11	PLUG, CONNECTOR 4P			
		<DIODE>			
D1431	8-719-110-88	DIODE RD39ESB2			
D1432	8-719-110-88	DIODE RD39ESB2			
D1433	8-719-991-33	DIODE 1SS133T-77			
		<CONNECTOR>			
DY1431	1-451-454-11	DEFLECTION YOKE			
		<COIL>			
L1431	1-410-478-11	INDUCTOR 47UH			
L1432	1-410-478-11	INDUCTOR 47UH			

The componants identified by shading and mark ⚠ are critical for safety.
Replace only with part number specified.

Les composants identifies par une trame et une marque ⚠ sont critiques pour la securite.
Ne les remplacer que par une piece portant le numero specifie.

ZG

REF. NO.	PART NO.	DESCRIPTION				REMARK
		<TRANSISTOR>				
Q1431	8-729-017-06	TRANSISTOR 2SC4793				
Q1432	8-729-017-05	TRANSISTOR 2SA1837				
Q1433	8-729-119-76	TRANSISTOR 2SA1175-HFE				
Q1434	8-729-119-78	TRANSISTOR 2SC2785-HFE				
Q1435	8-729-119-78	TRANSISTOR 2SC2785-HFE				
Q1436	8-729-119-78	TRANSISTOR 2SC2785-HFE				
		<RESISTOR>				
R1431	1-249-414-11	CARBON	560	5%	1/4W	
R1432	1-249-414-11	CARBON	560	5%	1/4W	
R1433	1-249-377-11	CARBON	0.47	5%	1/4W	F
R1435	1-215-908-00	METAL OXIDE	33	5%	3W	F
R1436	1-216-475-11	METAL OXIDE	120	5%	3W	F
R1437	1-249-414-11	CARBON	560	5%	1/4W	
R1438	1-249-432-11	CARBON	18K	5%	1/4W	
R1439	1-249-432-11	CARBON	18K	5%	1/4W	
R1440	1-249-414-11	CARBON	560	5%	1/4W	F
R1441	1-249-417-11	CARBON	1K	5%	1/4W	
R1442	1-247-815-91	CARBON	220	5%	1/4W	
R1443	1-249-377-11	CARBON	0.47	5%	1/4W	F
R1445	1-249-403-11	CARBON	68	5%	1/4W	
R1448	1-249-416-11	CARBON	820	5%	1/4W	
R1449	1-249-403-11	CARBON	68	5%	1/4W	
R1450	1-249-417-11	CARBON	1K	5%	1/4W	
R1451	1-249-411-11	CARBON	330	5%	1/4W	
R1452	1-249-417-11	CARBON	1K	5%	1/4W	
R1453	1-249-401-11	CARBON	47	5%	1/4W	
R1454	1-260-311-11	CARBON	39	5%	1/2W	
R1455	1-249-384-11	CARBON	1.8	5%	1/4W	F
R1456	1-215-916-00	METAL OXIDE	680	5%	3W	F
R1457	1-249-417-11	CARBON	1K	5%	1/4W	F
R1458	1-249-384-11	CARBON	1.8	5%	1/4W	F
R1459	1-249-400-11	CARBON	39	5%	1/4W	F
R1461	1-249-414-11	CARBON	560	5%	1/4W	
R1462	1-249-414-11	CARBON	560	5%	1/4W	
R1463	1-249-399-11	CARBON	33	5%	1/4W	
R1464	1-249-417-11	CARBON	1K	5%	1/4W	
R1465	1-215-908-00	METAL OXIDE	33	5%	3W	F
R1466	1-216-475-11	METAL OXIDE	120	5%	3W	F

****

REF. NO.	PART NO.	DESCRIPTION	REMARK
		MISCELLANEOUS	
		**********	
	⚠1-223-925-12	RESISTOR ASSY (HIGH-VOLTAGE)	
	⚠1-451-454-11	DEFLECTION YOKE (R) (G)	
	⚠1-451-455-21	DEFLECTION YOKE (B)	
	1-452-909-11	MAGNET ASSY, 4 POLE	
	1-505-378-11	SPEAKER (10CM)	
	1-556-945-21	CABLE, P-P	
	*1-557-056-41	CABLE, P-P	
	⚠1-769-837-11	CORD, POWER(WITH NOISE FILTER) (7.0A/125V)	
	8-598-414-00	ANTENNA SWITCH AS-2F	
	⚠8-598-955-11	BLOCK ASSY, HIGH-VOLTAGE	
	⚠8-733-495-05	PICTURE TUBE 07MAC2(B) (LONG NECK) (GA) (46C36)	
	⚠8-733-496-05	PICTURE TUBE 07MAC2(R) (LONG NECK) (GA) (46C36)	
	⚠8-733-497-05	PICTURE TUBE 07MAC3(B) (LONG NECK) (GA) (48S35/53S35)	
	⚠8-733-498-05	PICTURE TUBE 07MAC3(R) (LONG NECK) (GA) (48S35/53S35)	
	⚠8-733-507-05	PICTURE TUBE 07MAC4(B) (61S35)	
	⚠8-733-508-05	PICTURE TUBE 07MAC4(R) (61S35)	
	⚠8-733-518-05	PICTURE TUBE 07MAC2(G)(GC LENS)	

****

		ACCESSORIES AND PACKING MATERIALS
		**********
	3-859-371-31	MANUAL, INSTRUCTION
	3-701-627-00	BAG, POLYETHYLENE
	3-859-371-11	MANUAL, INSTRUCTION (61S35)
	3-859-371-31	MANUAL, INSTRUCTION (46C36)
	*4-037-674-01	BOARD, TOP (48S35)
	*4-041-426-01	BAG, PROTECTION (except 61S35)
	*4-041-428-01	BAG, POLYETHYLENE (61S35)
	*4-042-463-01	SHEET, PROTECTION
	*4-047-555-01	PLATE, TOP (61S35)
	*4-047-774-01	PLATE, TOP (46C36/53S35)
	*4-056-291-01	INDIVIDUAL CARTON (53S35)
	*4-056-292-01	CUSHION (UPPER) (ASSY) (53S35)
	*4-056-293-01	CUSHION (LOWER) (ASSY) (53S35)
	*4-056-298-01	PLATE, BOTTOM (53S35)
	*4-056-300-01	TRAY (53S35)
	*4-057-642-01	CUSHION (UPPER) (ASSY) (61S35)
	*4-057-643-01	CUSHION (LOWER) (ASSY) (61S35)
	*4-057-648-01	INDIVIDUAL CARTON (61S35)
	*4-057-649-01	TRAY (61S35)
	*4-057-650-01	BOARD, BOTTOM (61S35)
	*4-057-651-01	CUSHION (UPPER) (ASSY) (48S35)
	*4-057-652-01	CUSHION (LOWER) (ASSY) (48S35)
	*4-057-657-01	INDIVIDUAL CARTON (48S35)
	*4-057-658-01	TRAY (48S35)
	*4-057-659-01	BOARD, BOTTOM (48S35)
		REMOTE COMMANDER
		**********
	1-473-749-31	REMOTE COMMANDER (RM-Y136A)
	4-978-977-01	POCKET, COVER (FOR RM-Y136A)

Sony Corporation
Display Company
Quality Engineering Dept.

9-965-144-01

English
97CH15372-1
Printed in Japan